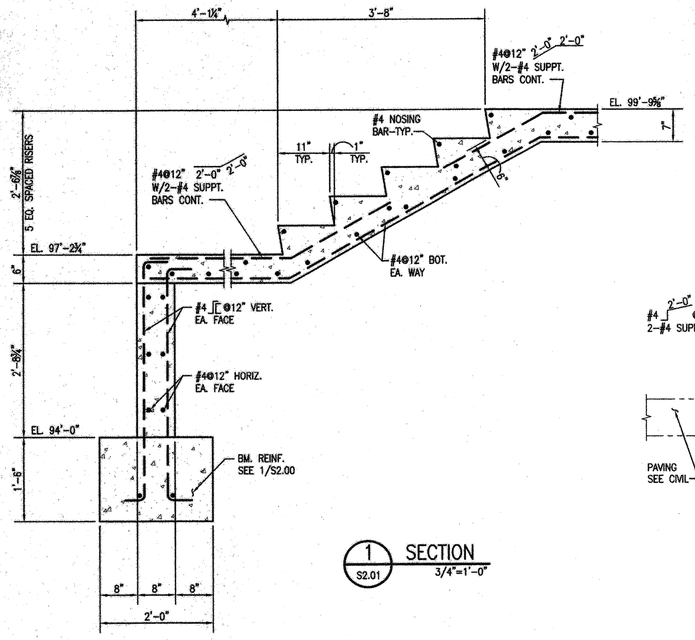

1 SECTION S2.01 3/4"=1'-0"

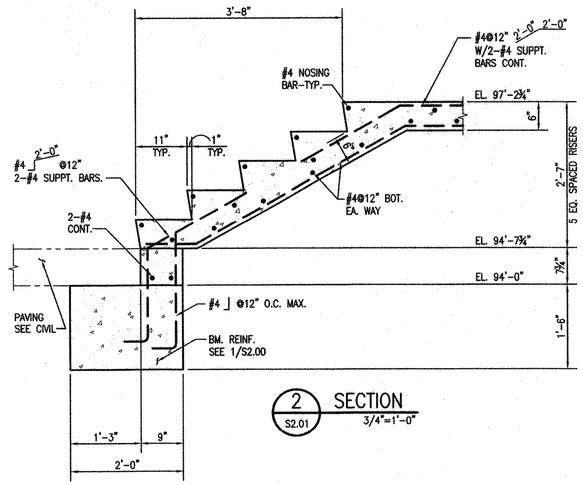

2 SECTION S2.01 3/4"=1'-0"

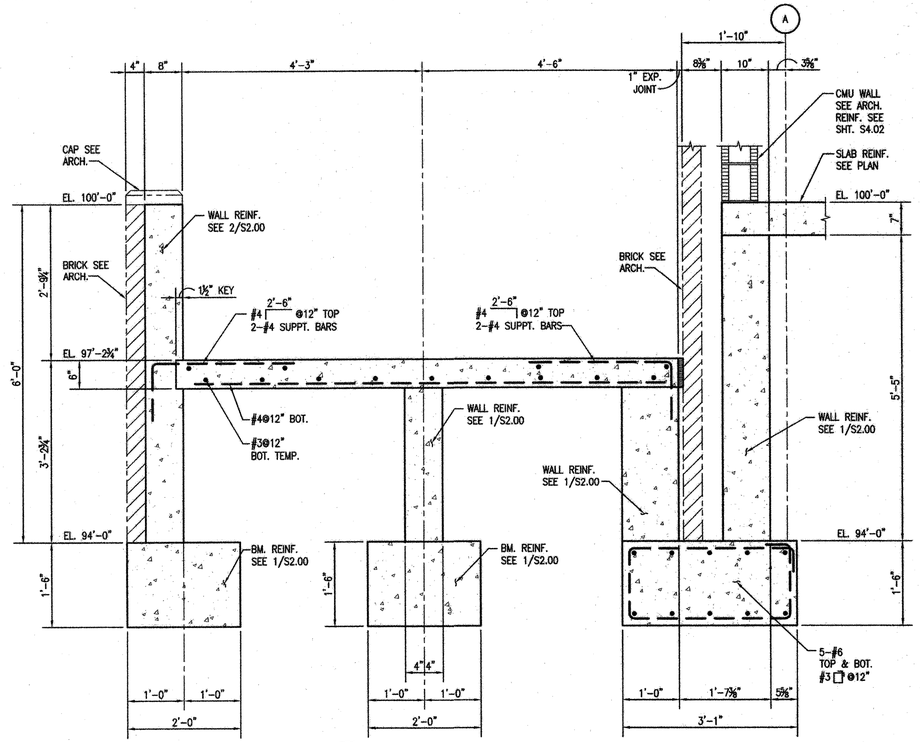

3 SECTION S2.01 3/4"=1'-0"

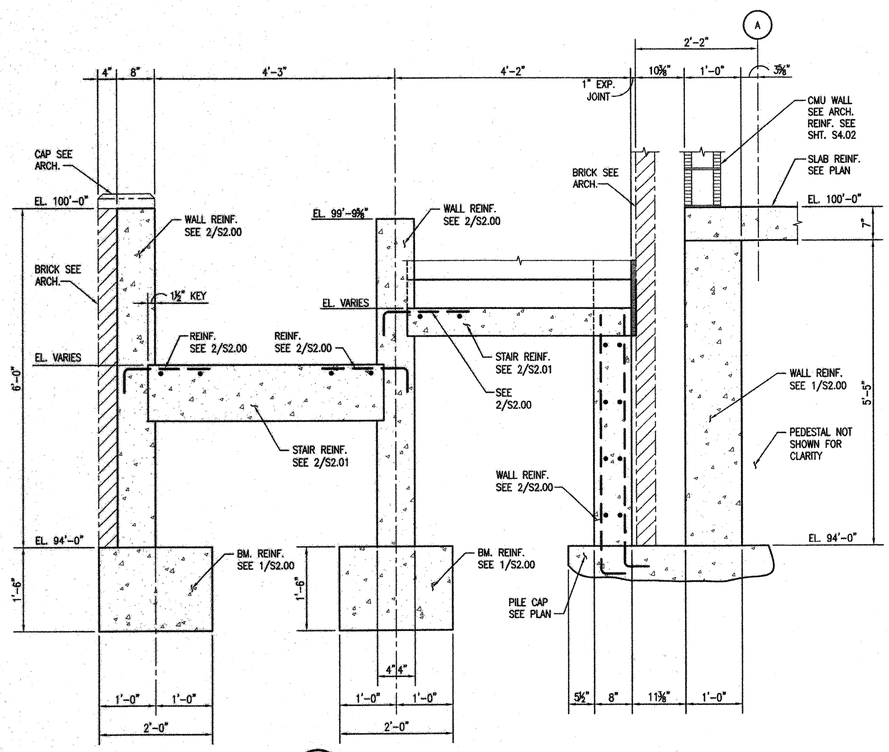

4 SECTION S2.01 3/4"=1'-0"

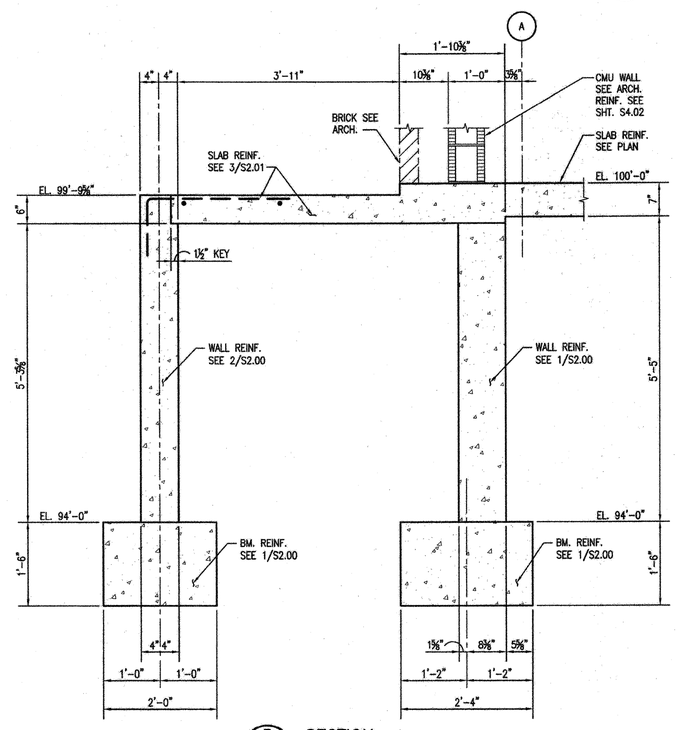

5 SECTION S2.01 3/4"=1'-0"

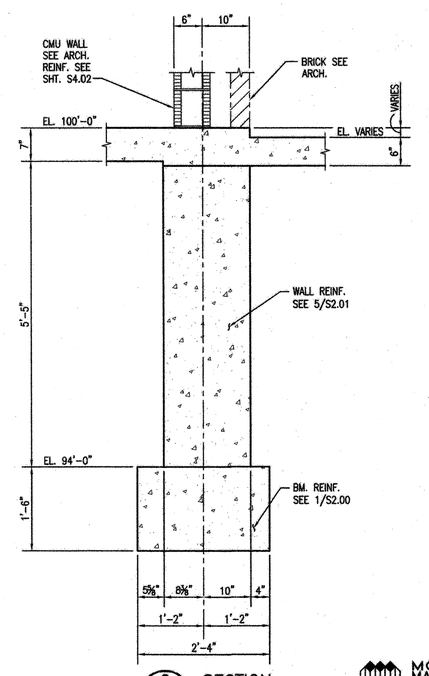

6 SECTION S2.01 3/4"=1'-0"

MORPHY MAKOFSKY INCORPORATED
CONSULTING ENGINEERS
(504)488-1317
JOB NO. 12053

VergesRome Architects
FANNING HOWEY
A Joint Venture
320 N. Carrollton Avenue, Suite 100
New Orleans, Louisiana 70119
t. 504.488.7739 f. 504.488.7743

© copyright 2012

STATE OF LOUISIANA
DONALD C. MAKOFSKY
License No. 10439
PROFESSIONAL ENGINEER
IN
CIVIL ENGINEERING

DEC 07 2012

NEW 3 SECTION ELEMENTARY SCHOOL AT FISK-HOWARD SCHOOL
RECOVERY SCHOOL DISTRICT

211 S. LOPEZ STREET
NEW ORLEANS, LOUISIANA 70119

DATE ISSUED:	7 DECEMBER, 2012
REVISED:	
REVISED:	
REVISED:	
REVISED:	
DRAWN BY:	WFD
CHECKED BY:	JAS

PHASE:
BID DOCUMENTS

11085

TITLE:
SECTIONS AND DETAILS

SHEET:
S2.01