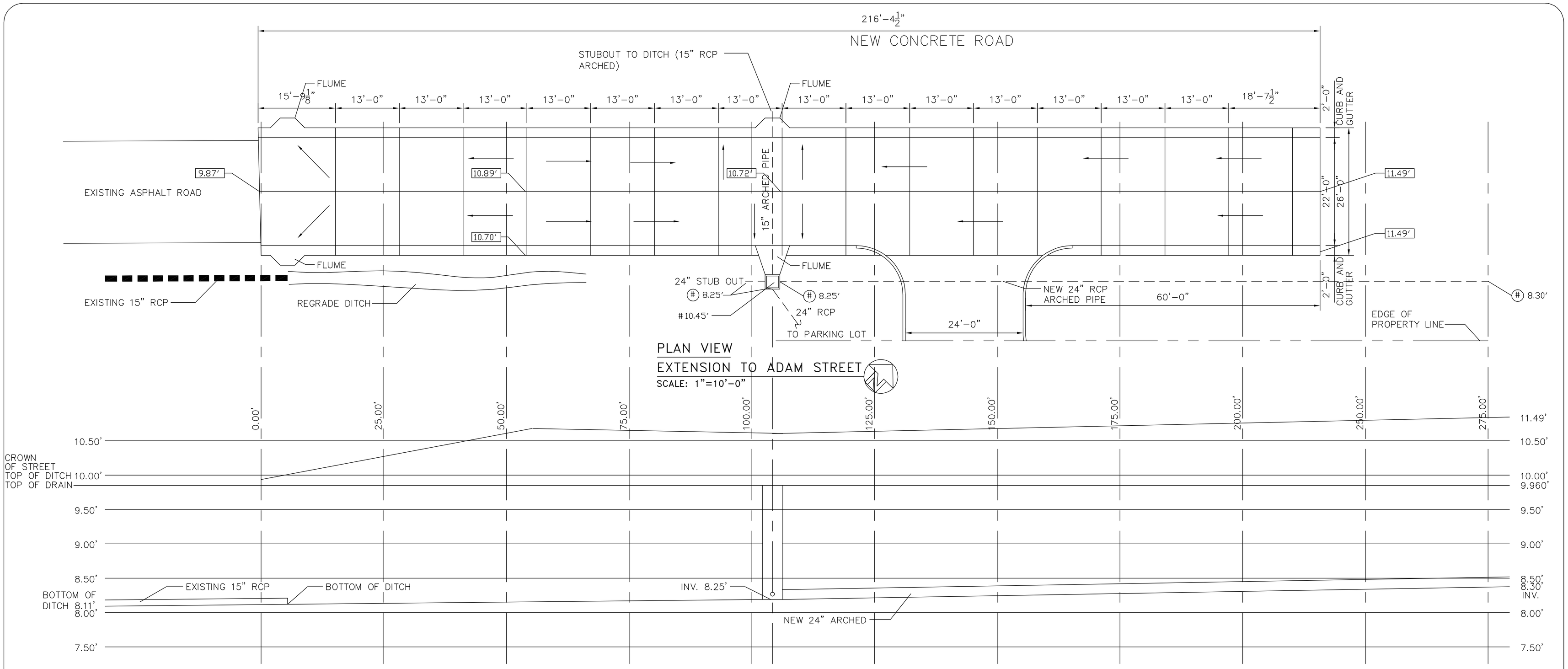

STREET SECTION
N.T.S.

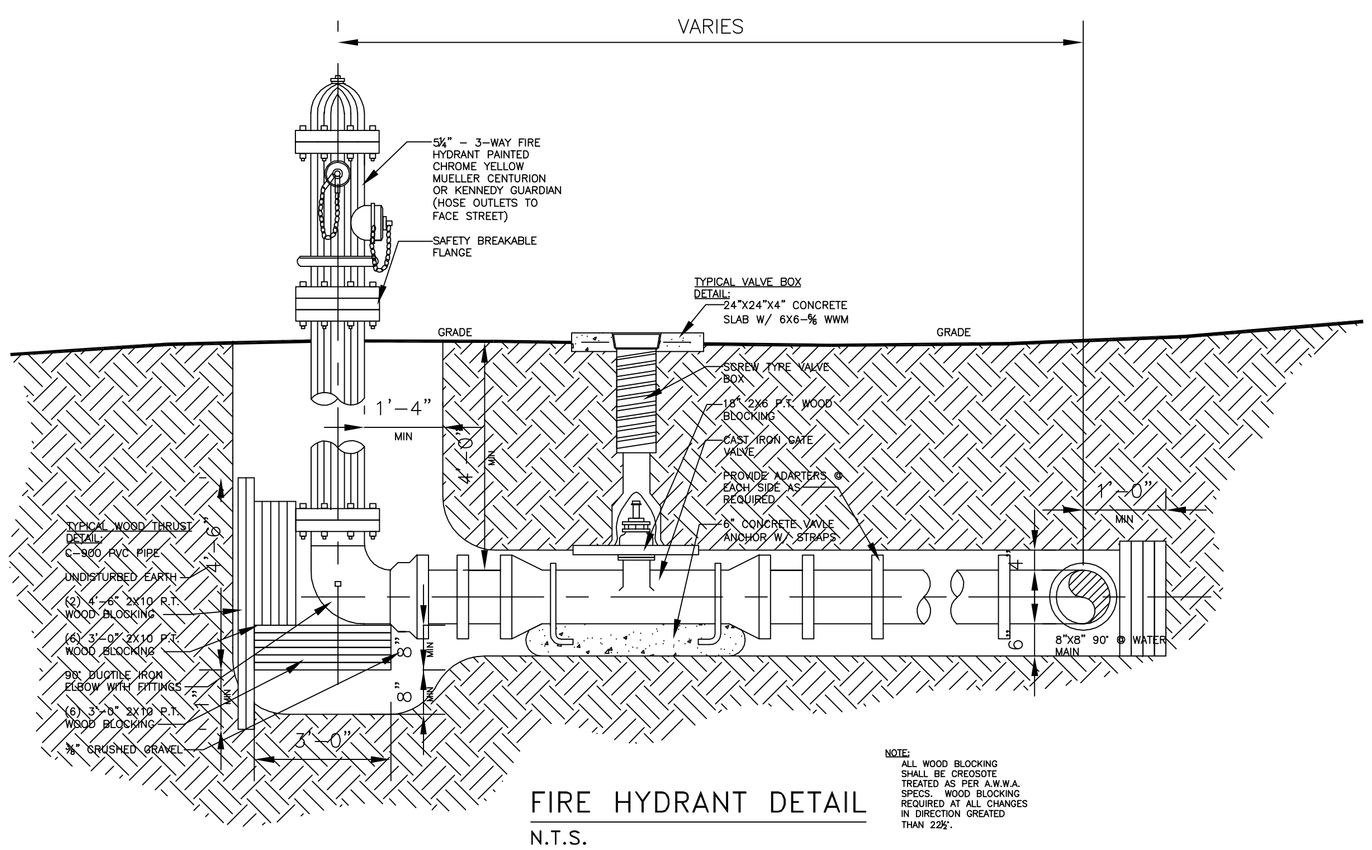

NOTE:
ALL WOOD BLOCKING SHALL BE CREOSOTE TREATED AS PER A.W.W.A. SPECS. WOOD BLOCKING REQUIRED AT ALL CHANGES IN DIRECTION GREATED THAN 22½°.

FIRE HYDRANT DETAIL
N.T.S.

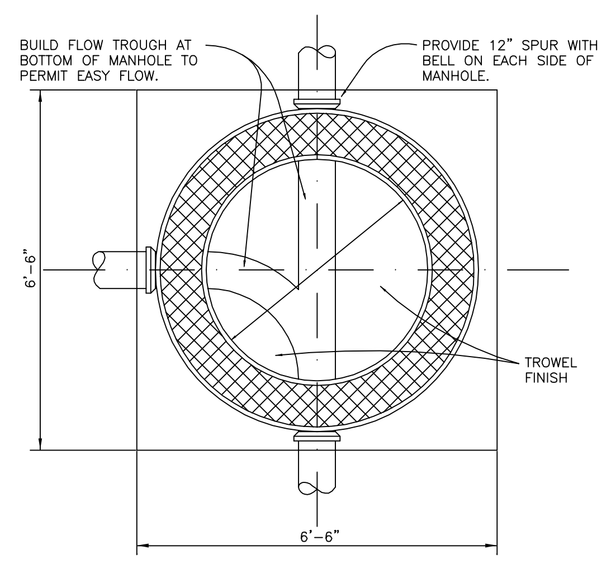

TYPICAL SEWER MANHOLE BOTTOM
N.T.S.

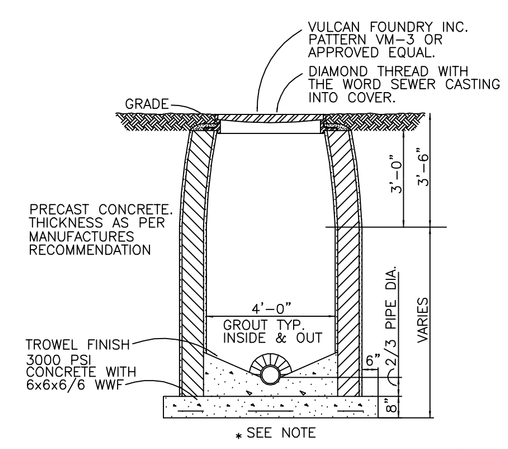

STANDARD SEWER MANHOLE
N.T.S.

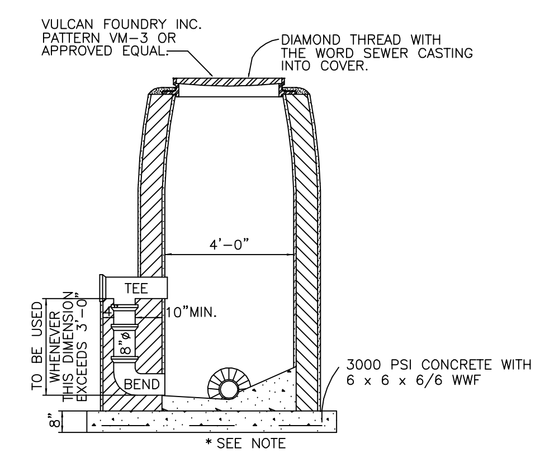

DROP SEWER MANHOLE
N.T.S.

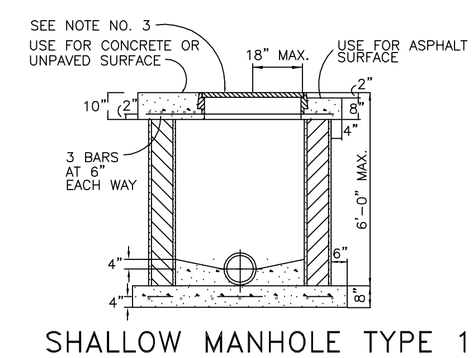

SHALLOW MANHOLE TYPE 1
N.T.S.

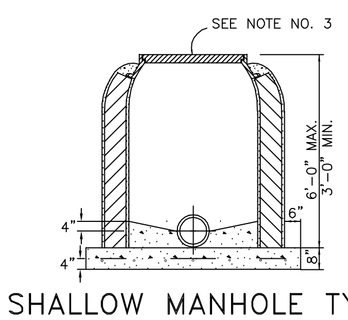

SHALLOW MANHOLE TYPE 2
N.T.S.

REVISED 01-28-05

EXTENSION ADAM STREET

RICHARDSON PROPERTY
ADAM STREET
SLIDELL, LOUISIANA

NEW STORAGE FACILITY

DAMMON ENGINEERING, INC.
ARCHITECTS — ENGINEERS
1095 FLORIDA AVENUE 985-649-5832 SLIDELL, LA. 70458
DAMMONENGINEERING.COM

SCALE:AS NOTED
FILE:
JOB NO. 1586
DATE: 5-24-04
SHEET
C-3
OF