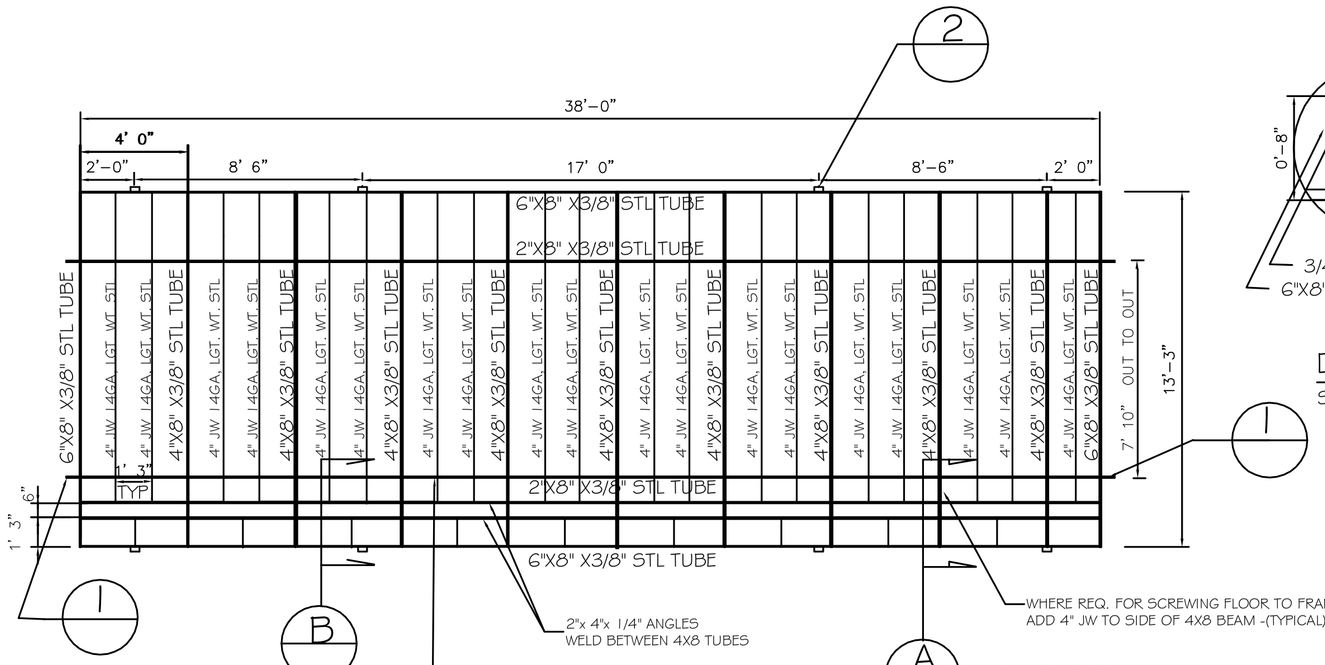

PLAN VIEW

SCALE- 1/4" = 1' 0"

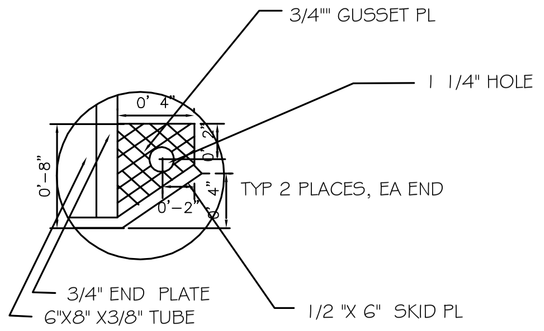

DETAIL 1

SCALE = NONE

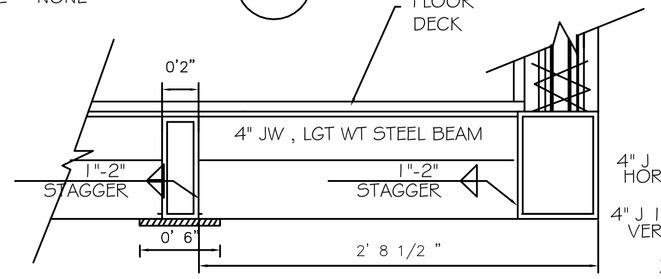

SECTION B

SCALE - NONE

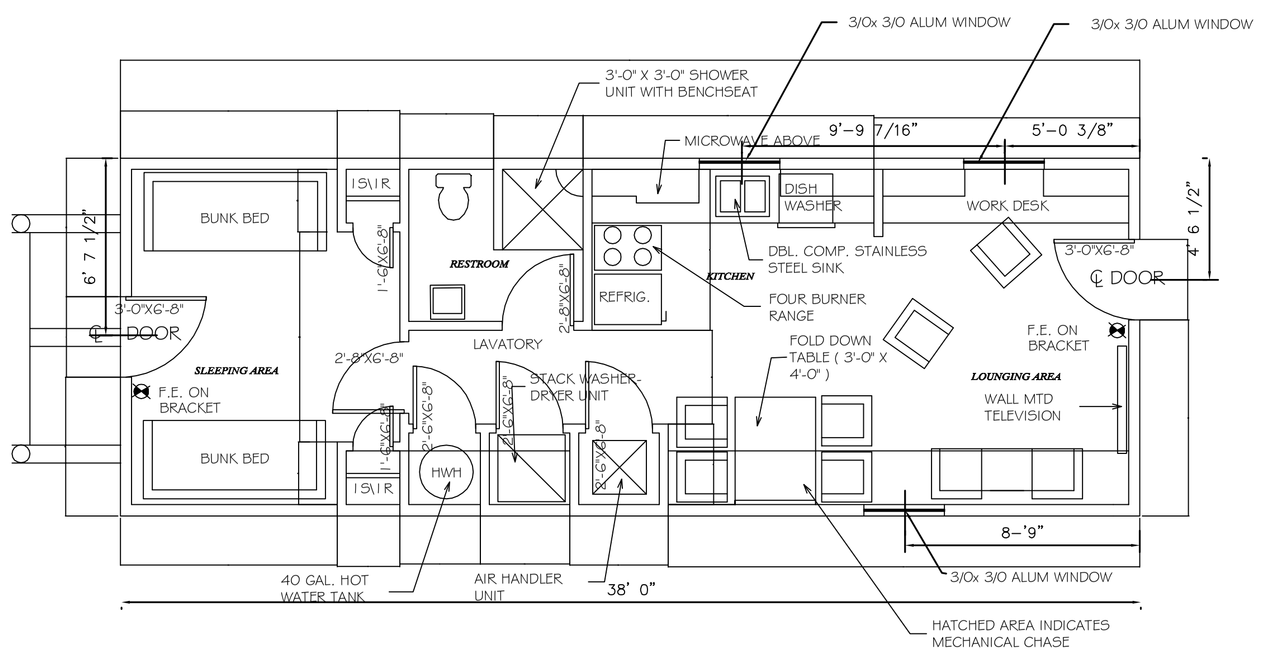

FLOOR PLAN

SCALE 1/4" = 1'-0"

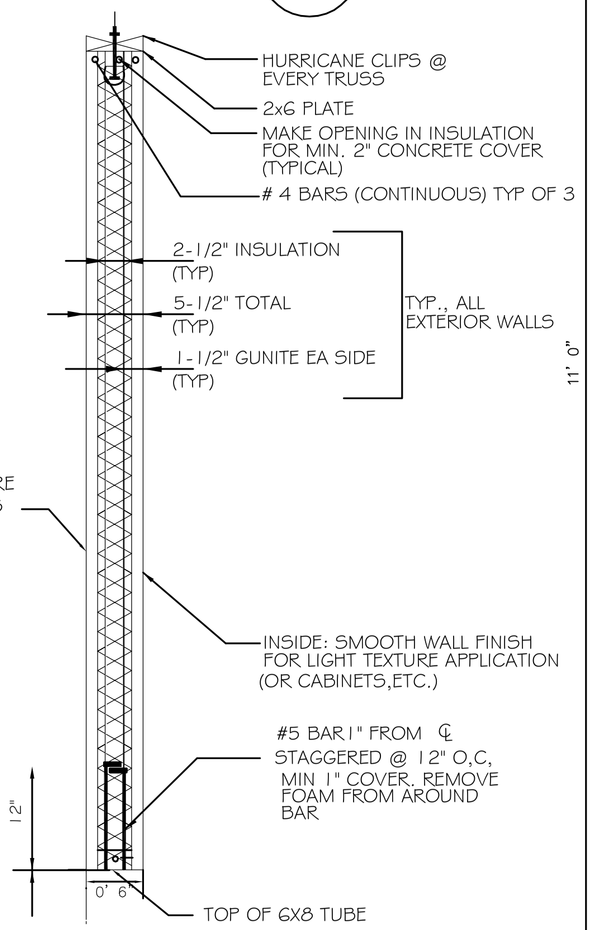

TYPICAL WALL

SCALE: NONE

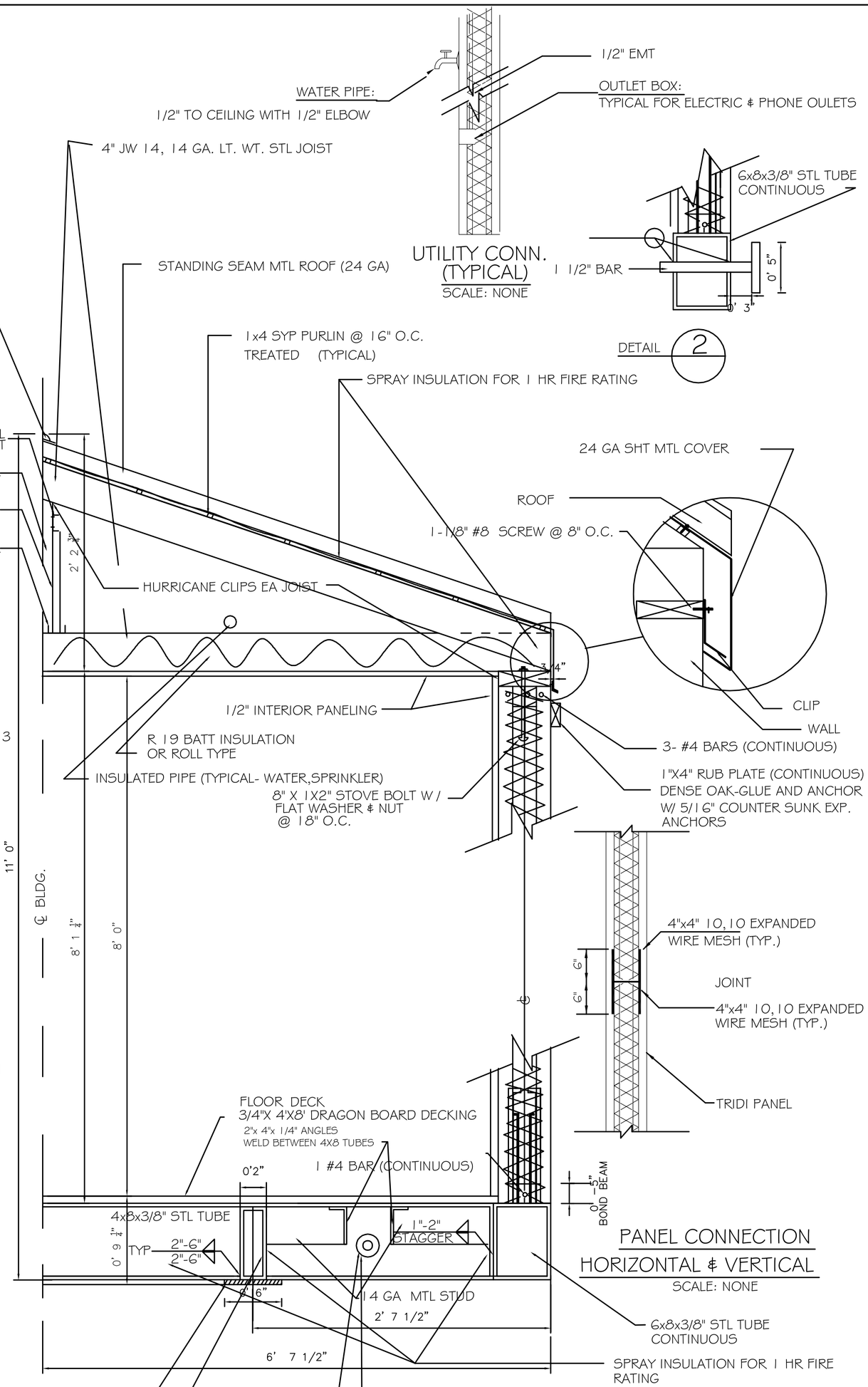

PANEL CONNECTION HORIZONTAL & VERTICAL

SCALE: NONE

SECTION A

NONE

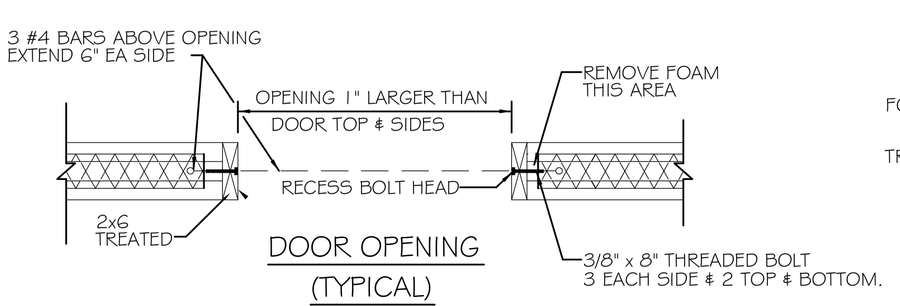

DOOR OPENING (TYPICAL)

SCALE: NONE

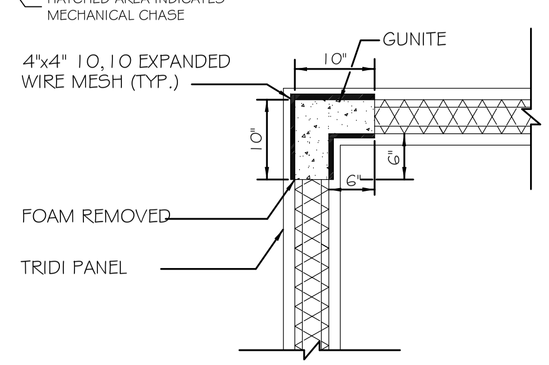

CORNER CONNECTION (TYPICAL)

SCALE: NONE

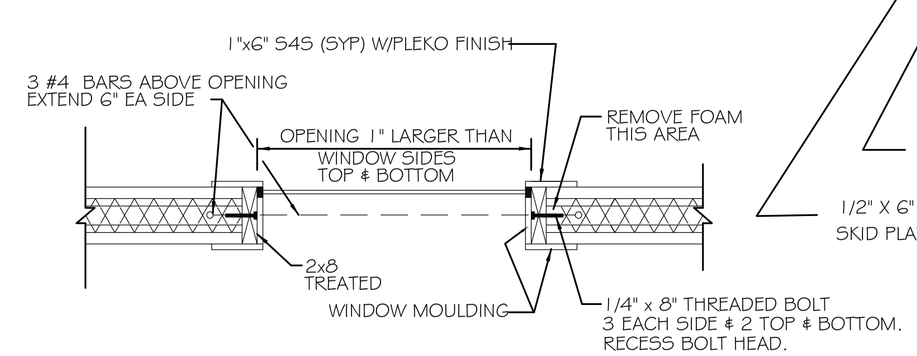

WINDOW OPENING (TYPICAL)

SCALE: NONE

RATINGS

IBC BASIC WIND SPEED -(3 SECOND GUST)
WIND -140 MPH (WHEN ANCHORED PER HUD REQUIREMENTS)

SNOW - 100 PSF
INSULATION
EXTERIOR WALLS R= 42
ROOF / CEILING R= 29
FLOOR R= 10
SPRINKLE PER NFPA 101
INCLUDING ATTIC
COMPONANT RATINGS
EXTERIOR WALLS 1 HR
ROOF- NONE
FLOOR- 1 HR
DOORS - 1HR
WINDOWS

NOTES:

1. WHERE FOAM IS REMOVED FROM ANY SECTION OF PANEL, USE EXPANDED METAL LATH FOR BACK UP WHEN SHOOTING GUNITE.
2. LAP STEEL BARS MINIMUM OF 16" AT SPLICES.
3. SHOTCRETE SHALL BE MINIMUM 4000 PSI.
4. REBAR SHALL BE f y 60000 PSI
5. WELD CAP ON OPEN ENDS OF ALL OPEN STEEL TUBES
6. ALL FRAME WELDING SHALL BE CONTINUOUS, WITH 1/4" FILLET, UNLESS SHOWN OTHERWISE.
7. ROOF TRUSSES
   ROOF AND CEILING JOIST, AND CONNECTIONS TO LGT. GA. METAL SHALL BE WITH
   APPROPRIATE STAINLESS SHT METAL SCREWS. BRACE ROOF IN LONGTUDINAL DIRECTION WITH X BRACING EVERY OTHER RAFTER.
   ATTACH 1X4 PURLINS W/2- 1 1/2" #6 SCREWS EA RAFTER

REVISED 3/20/2008

DAMMON ENGINEERING, INC.

CHIEF ENGINEER
EMMETT DAMMON, P.E.

CHIEF ARCHITECT
ROBERT WILTSE

1095 FLORIDA AVENUE
SLIDELL, LA. 70458
OFFICE: 985-649-5832
FAX: 985-641-5950

WEBSITE: WWW.DAMMONENGINEERING.COM

EMAIL: DAMMONENG@BELLSOUTH.NET

ARCHITECTURE
ENGINEERING
STUDIES
PLANNING
INVESTIGATION
EXPERT WITNESS

OFFICE / QUARTERS BUILDING

JERRY GIBBENS
LAFAYETTE, LA

STRUCTURAL PLAN

REV:

SCALE: AS NOTED

JOB#:

DATE: 04-17-08

SHEET

S-1

OF

Your complimentary use has expired. Thank you for using PDF Complete.
Click Here to upgrade to Unlimited Pages and Expanded Features