Components and Cladding		h ≤ 60 ft.
Figure 30.4-5B	External Pressure Coefficients, GC_p	Monoslope Roofs
Enclosed, Partially Enclosed Buildings		10°< θ ≤ 30°

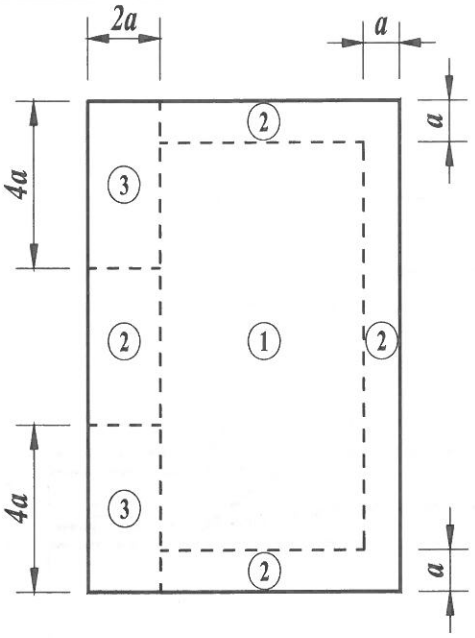

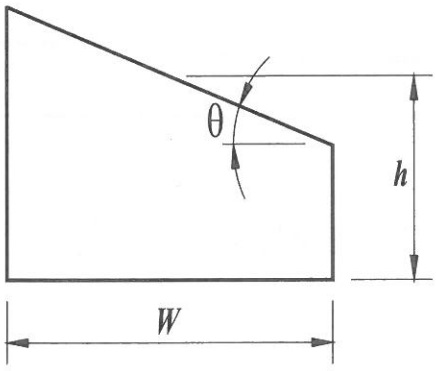

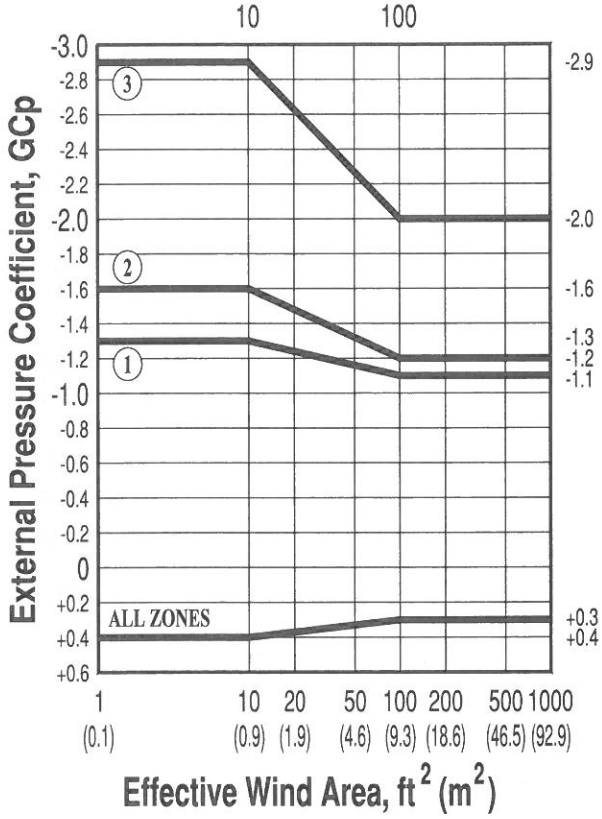

Notes:

1. Vertical scale denotes GC_p to be used with q_h.
2. Horizontal scale denotes effective wind area A, in square feet (square meters).
3. Plus and minus signs signify pressures acting toward and away from the surfaces, respectively.
4. Each component shall be designed for maximum positive and negative pressures.
5. Notation:
   - a: 10 percent of least horizontal dimension or $0.4h$, whichever is smaller, but not less than either 4 percent of least horizontal dimension or 3 ft (0.9 m).
   - h: Mean roof height, in feet (meters).
   - W: Building width, in feet (meters).
   - θ: Angle of plane of roof from horizontal, in degrees.