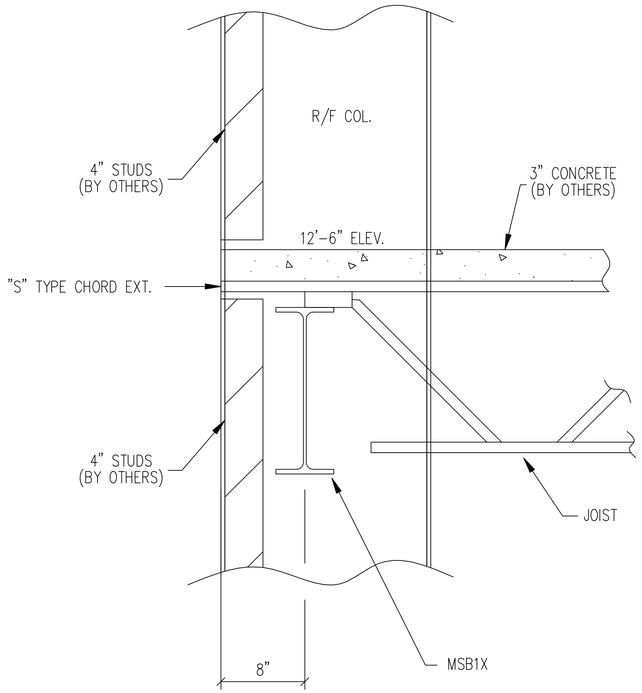

SECTION H E7 / E11

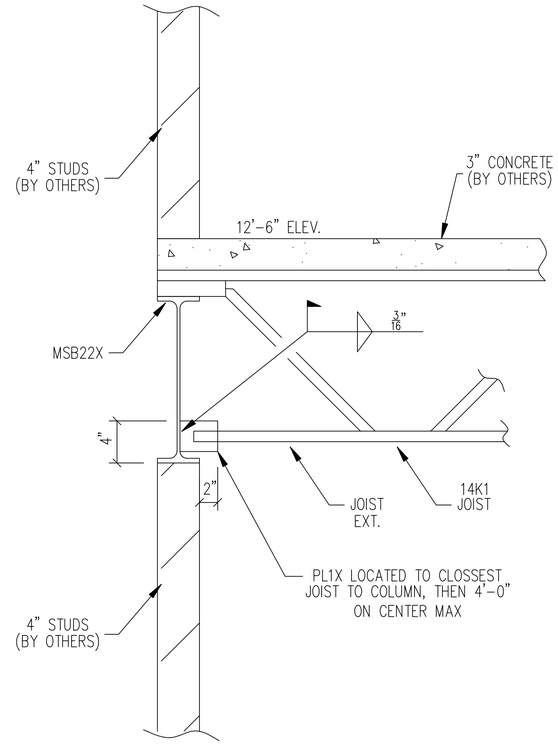

SECTION J E7 / E11

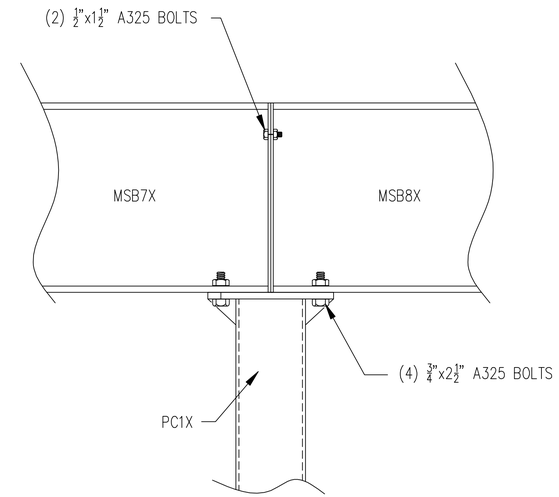

SECTION K E7 / E11

REVISION	DWN.	CKD.	DATE

DRAWN : DATE
CHECKED : DATE
PERMIT/APP : MY DATE 2/13/12

SCALE : NTS

REV. 0

SHEET E11 OF 11

JOB R-4462

JOB NAME: *HAIR SALON SUPPLIES*
JOB LOCATION: *SLIDELL, LA.*

ERECTION SHEET

MBMA
RUFFIN BUILDING SYSTEMS
Hwy. 2 West -- Oak Grove, La. -- (318)428-2305

APPROVED

PROFESSIONAL ENGINEER