This document is not an ASTM standard and is intended only to provide the user of an ASTM standard an indication of what changes have been made to the previous version. Because it may not be technically possible to adequately depict all changes accurately, ASTM recommends that users consult prior editions as appropriate. In all cases only the current version of the standard as published by ASTM is to be considered the official document.

Designation: B 26/B 26M – 0~~2~~3

Standard Specification for Aluminum-Alloy Sand Castings[1]

This standard is issued under the fixed designation B 26/B 26M; the number immediately following the designation indicates the year of original adoption or, in the case of revision, the year of last revision. A number in parentheses indicates the year of last reapproval. A superscript epsilon (ϵ) indicates an editorial change since the last revision or reapproval.

This standard has been approved for use by agencies of the Department of Defense.

[1] This specification is under the jurisdiction of ASTM Committee B07 on Light Metals and Alloys and is the direct responsibility of Subcommittee B07.01 on Aluminum Alloy Ingots and Castings.

Current edition approved ~~Oct.~~ Apr. 10, 200~~2~~3. Published ~~January~~ September 2003. Originally ~~published as B 26 – 18 T.~~ approved in 1918. Last previous edition approved in 2002 as B 26/B 26M – 0~~1~~2.

Copyright © ASTM International, 100 Barr Harbor Drive, PO Box C700, West Conshohocken, PA 19428-2959, United States.

1. Scope*

1.1 This specification[2] covers aluminum-alloy sand castings designated as shown in Table 1.

1.2 This specification is not intended for aluminum-alloy sand castings used in aerospace applications.

1.3 Alloy and temper designations are in accordance with ANSI H35.1 and H35.1M. Unified Numbering System alloy designations are in accordance with Practice E 527.

1.~~3~~4 Unless the order specifies the "M" specification designation, the material shall be furnished to the inch-pound units.

1.~~4~~5 For acceptance criteria for inclusion of new aluminum and aluminum alloys and their properties in this specification, see Annex A1 and Annex A2.

1.~~5~~6 The values stated in either inch-pound units or SI units are to be regarded separately as standards. The SI units are shown in brackets or in separate tables or columns. The values stated in each system are not exact equivalents; therefore, each system must be used independent of the other. Combining values from the two systems may result in nonconformance with the specification.

1.7 This standard does not purport to address all of the safety concerns, if any, associated with its use. It is the responsibility of the user of this standard to establish appropriate safety and health practices and determine the applicability of regulatory limitations prior to use.

2. Referenced Documents

2.1 The following documents of the issue in effect on date of material purchase form a part of this specification to the extent referenced herein:

2.2 *ASTM Standards:*

B 179 Specification for Aluminum Alloys in Ingot and Molten Forms for Castings from All Casting Processes[3]

B 275 Practice for Codification of Certain Nonferrous Metals and Alloys, Cast and Wrought[3]

B 557 Test Methods for Tension Testing Wrought and Cast Aluminum- and Magnesium-Alloy Products[3]

B 557M Test Methods for Tension Testing Wrought and Cast Aluminum- and Magnesium-Alloy Products [Metric][3]

B 660 Practices for Packaging/Packing of Aluminum and Magnesium Products[3]

B 881 Terminology Relating to Aluminum- and Magnesium-Alloy Products[3]

B 917/B 917M Practice for Heat Treatment of Aluminum-Alloy Castings from All Processes[3]

D 3951 Practice for Commercial Packaging[4]

E 29 Practice for Using Significant Digits in Test Data to Determine Conformance with Specifications[5]

E 34 Test Methods for Chemical Analysis of Aluminum and Aluminum Base-Alloys[6]

E 88 Practice for Sampling Nonferrous Metals and Alloys in Cast Form for Determination of Chemical Composition[6]

E 94 Guide for Radiographic Testing[7]

E 155 Reference Radiographs for Examination of Aluminum and Magnesium Castings[7]

E 165 Test Method for Liquid Penetrant Examination[7]

~~E 227 Test Method for Optical Emission Spectrometric Analysis of Aluminum and Aluminum Alloys by the Point-to-Plane Technique[5]~~

~~E~~ 527 Practice for Numbering Metals and Alloys (UNS)[8]

E 607 Test Method for Optical Emission Spectrometric Analysis of Aluminum and Aluminum Alloys by the Point-to-Plane Technique, Nitrogen Atmosphere[6]

E 716 Practices for Sampling Aluminum and Aluminum Alloys for Spectrochemical Analysis[6]

E 1251 Test Method for Optical Emission Spectrometric Analysis of Aluminum and Aluminum Alloys by the Argon Atmosphere, Point-to-Plane, Unipolar Self-Initiating Capacitor Discharge[~~5~~ 6]

IEEE/ASTM SI 10 Standard for Use of the International System of Units (SI): The Modern Metric System[5]

2.3 *AMS Standard:*

AMS 2771 Heat Treatment of Aluminum Alloy Castings [9]

2.4 *American National Standards:*

H35.1 Alloy and Temper Designation System for Aluminum[10]

H35.1M Alloy and Temper Designation System for Aluminum [Metric][10]

2.~~4~~5 *Military Standards:*

---

[2] For ASME Boiler and Pressure Vessel Code applications see related Specification SB-26/SB-26M in Section II of that Code.

[3] *Annual Book of ASTM Standards*, Vol 02.02.

[4] *Annual Book of ASTM Standards*, Vol ~~14.02.~~ 15.09.

[5] *Annual Book of ASTM Standards*, Vol ~~03.05.~~ 14.02.

[6] *Annual Book of ASTM Standards*, Vol 03.0~~3~~5.

[7] *Annual Book of ASTM Standards*, Vol ~~01.01.~~ 03.03.

[8] *Annual Book of ASTM Standards*, Vol ~~02.02, in the Related Material section (gray pages).~~ 01.01.

[9] Available from ~~Standardization Documents, Order Desk, Bldg. 4, Section D, 700 Robbins Ave., Philadelphia,~~ Society of Automotive Engineers (SAE), 400 Commonwealth Dr., Warrendale, PA ~~19111-5094, Attn: NPODS.~~ 15096-0001.

~~[10] The Aluminum Association, 900 19th Street, NW, Washington, DC 20006.~~

[10] *Annual Book of ASTM Standards*, Vol 02.02, in the Related Material section (gray pages).

TABLE 1 Chemical Composition Limits

NOTE 1—When single units are shown, these indicate the maximum amounts permitted.

NOTE 2—Analysis shall be made for the elements for which limits are shown in this table.

NOTE 3—The following applies to all specified limits in this table: For purposes of determining conformance to these limits, an observed value or a calculated value obtained from analysis shall be rounded to the nearest unit in the last right-hand place of figures used in expressing the specified limit in accordance with the rounding method of Practice E 29.

Alloy		Aluminum	Composition, (Values in Weight Percent)										Others~~A~~	
ANSI~~B~~	UNS		Silicon	Iron	Copper	Man-ganese	Magne-sium	Chromium	Nickel	Zinc	Tin	Titanium	Each	Total~~C~~
~~201.0~~	~~A02010~~	~~remainder~~	~~0.10~~	~~0.15~~	~~4.0–5.2~~	~~0.20–0.50~~	~~0.15–0.55~~	~~...~~	~~...~~	~~...~~	~~...~~	~~0.15–0.35~~	~~0.05[D]~~	~~0.10~~
201.0	A02010	remainder	0.10	0.15	4.0–5.2	0.20–0.50	0.15–0.55	...	...	...	...	0.15–0.35	0.05[A]	0.10
204.0	A02040	remainder	0.20	0.35	4.2–5.0	0.10	0.15–0.35	...	0.05	0.10	0.05	0.15–0.30	0.05	0.15
~~208.0~~	~~A02080~~	~~remainder~~	~~2.5–3.5~~	~~1.2~~	~~3.5–4.5~~	~~0.50~~	~~0.10~~	~~...~~	~~0.35~~	~~1.0~~	~~...~~	~~0.25~~	~~...~~	~~0.50~~
~~222.0~~	~~A02220~~	~~remainder~~	~~2.0~~	~~1.5~~	~~9.2–10.7~~	~~0.50~~	~~0.15–0.35~~	~~...~~	~~0.50~~	~~0.8~~	~~...~~	~~0.25~~	~~...~~	~~0.35~~
242.0	A02420	remainder	0.7	1.0	3.7–4.5	0.35	1.2–1.8	0.25	1.7–2.3	0.35	...	0.25	0.05	0.15
A242.0	A12420	remainder	0.6	0.8	3.7–4.5	0.10	1.2–1.7	0.15–0.25	1.8–2.3	0.10	...	0.07–0.20	0.05	0.15
295.0	A02950	remainder	0.7–1.5	1.0	4.0–5.0	0.35	0.03	...	...	0.35	...	0.25	0.05	0.15
319.0	A03190	remainder	5.5–6.5	1.0	3.0–4.0	0.50	0.10	...	0.35	1.0	...	0.25	...	0.50
328.0	A03280	remainder	7.5–8.5	1.0	1.0–2.0	0.20–0.6	0.20–0.6	0.35	0.25	1.5	...	0.25	...	0.50
~~355.0~~	~~A03550~~	~~remainder~~	~~4.5–5.5~~	~~0.6[E]~~	~~1.0–1.5~~	~~0.50[E]~~	~~0.40–0.6~~	~~0.25~~	~~...~~	~~0.35~~	~~...~~	~~0.25~~	~~0.05~~	~~0.15~~
355.0	A03550	remainder	4.5–5.5	0.6[B]	1.0–1.5	0.50[B]	0.40–0.6	0.25	...	0.35	...	0.25	0.05	0.15
C355.0	A33550	remainder	4.5–5.5	0.20	1.0–1.5	0.10	0.40–0.6	...	...	0.10	...	0.20	0.05	0.15
~~356.0~~	~~A03560~~	~~remainder~~	~~6.5–7.5~~	~~0.6[E]~~	~~0.25~~	~~0.35[E]~~	~~0.20–0.45~~	~~...~~	~~...~~	~~0.35~~	~~...~~	~~0.25~~	~~0.05~~	~~0.15~~
356.0	A03560	remainder	6.5–7.5	0.6[B]	0.25	0.35[B]	0.20–0.45	...	...	0.35	...	0.25	0.05	0.15
A356.0	A13560	remainder	6.5–7.5	0.20	0.20	0.10	0.25–0.45	...	...	0.10	...	0.20	0.05	0.15
443.0	A04430	remainder	4.5–6.0	0.8	0.6	0.50	0.05	0.25	...	0.50	...	0.25	...	0.35
B443.0	A24430	remainder	4.5–6.0	0.8	0.15	0.35	0.05	...	...	0.35	...	0.25	0.05	0.15
512.0	A05120	remainder	1.4–2.2	0.6	0.35	0.8	3.5–4.5	0.25	...	0.35	...	0.25	0.05	0.15
514.0	A05140	remainder	0.35	0.50	0.15	0.35	3.5–4.5	...	...	0.15	...	0.25	0.05	0.15
520.0	A05200	remainder	0.25	0.30	0.25	0.15	9.5–10.6	...	...	0.15	...	0.25	0.05	0.15
~~535.0~~	~~A05350~~	~~remainder~~	~~0.15~~	~~0.15~~	~~0.05~~	~~0.10–0.25~~	~~6.2–7.5~~	~~...~~	~~...~~	~~...~~	~~...~~	~~0.10–0.25~~	~~0.05[F]~~	~~0.15~~
535.0	A05350	remainder	0.15	0.15	0.05	0.10–0.25	6.2–7.5	...	...	...	...	0.10–0.25	0.05[C]	0.15
705.0	A07050	remainder	0.20	0.8	0.20	0.40–0.6	1.4–1.8	0.20–0.40	...	2.7–3.3	...	0.25	0.05	0.15
707.0	A07070	remainder	0.20	0.8	0.20	0.40–0.6	1.8–2.4	0.20–0.40	...	4.0–4.5	...	0.25	0.05	0.15
~~710.0[G]~~	~~A07100~~	~~remainder~~	~~0.15~~	~~0.50~~	~~0.35–0.65~~	~~0.05~~	~~0.6–0.8~~	~~...~~	~~...~~	~~6.0–7.0~~	~~...~~	~~0.25~~	~~0.05~~	~~0.15~~
710.0[D]	A07100	remainder	0.15	0.50	0.35–0.65	0.05	0.6–0.8	...	...	6.0–7.0	...	0.25	0.05	0.15
~~712.0[G]~~	~~A07120~~	~~remainder~~	~~0.30~~	~~0.50~~	~~0.25~~	~~0.10~~	~~0.50–0.65~~	~~0.40–0.6~~	~~...~~	~~5.0–6.5~~	~~...~~	~~0.15–0.25~~	~~0.05~~	~~0.20~~
712.0[D]	A07120	remainder	0.30	0.50	0.25	0.10	0.50–0.65	0.40–0.6	...	5.0–6.5	...	0.15–0.25	0.05	0.20
713.0	A07130	remainder	0.25	1.1	0.40–1.0	0.6	0.20–0.50	0.35	0.15	7.0–8.0	...	0.25	0.10	0.25
771.0	A07710	remainder	0.15	0.15	0.10	0.10	0.8–1.0	0.06–0.20	...	6.5–7.5	...	0.10–0.20	0.05	0.15
850.0	A08500	remainder	0.7	0.7	0.7–1.3	0.10	0.10	...	0.7–1.3	...	5.5–7.0	0.20	...	0.30
~~851.0[G]~~	~~A08510~~	~~remainder~~	~~2.0–3.0~~	~~0.7~~	~~0.7–1.3~~	~~0.10~~	~~0.10~~	~~...~~	~~0.30–0.7~~	~~...~~	~~5.5–7.0~~	~~0.20~~	~~...~~	~~0.30~~
851.0[D]	A08510	remainder	2.0–3.0	0.7	0.7–1.3	0.10	0.10	...	0.30–0.7	...	5.5–7.0	0.20	...	0.30
~~852.0[G]~~	~~A08520~~	~~remainder~~	~~0.40~~	~~0.7~~	~~1.7–2.3~~	~~0.10~~	~~0.6–0.9~~	~~...~~	~~0.9–1.5~~	~~...~~	~~5.5–7.0~~	~~0.20~~	~~...~~	~~0.30~~
852.0[D]	A08520	remainder	0.40	0.7	1.7–2.3	0.10	0.6–0.9	...	0.9–1.5	...	5.5–7.0	0.20	...	0.30

[A] "Others" includes listed elements for which no specific limit is shown as well as unlisted metallic elements. The producer may analyze samples for trace elements not specified in the specification. However, such analysis is not required and may not cover all metallic "Others" elements. Should any analysis by the producer or the purchaser establish that an "Others" element exceeds the limit of "Each" or that the aggregate of several "Others" elements exceeds the limit of "Total," the material shall be considered nonconforming.

[B] ASTM alloy designations are recorded in Practice B 275.

[C] Other Elements–Total shall be the sum of unspecified metallic elements 0.010 % or more, rounded to the second decimal before determining the sum.

[D] ~~Contains silver 0.40–1.0 %.~~

~~[E] If iron exceeds 0.45 %, manganese content shall not be less than one half of the iron content.~~

~~[F] Contains beryllium 0.003–0.007 %, boron 0.005 % max.~~

[G] 710.0 formerly A712.0, 712.0 formerly D712.0, 851.0 formerly A850.0, 852.0 formerly B850.0.

MIL-STD-129 Marking for Shipment and Storage[11]

MIL-STD-276 Impregnation of Porous Nonferrous Metal Castings

~~MIL-STD-278 Welding and Allied Processes for Machinery for Ships of the United States Navy[9]~~

~~MIL-I-13857 Impregnation of Metal Castings[9]~~[11]

NAVSEA Technical Publication S9074-AR-GIB-010/278[11]

2.~~5~~6 *Federal Standard:*

FED. STD. No. 123 Marking for Shipment (Civil Agencies)[11]

3. Terminology

3.1 ~~*Definitions:*~~

[11] This specification is under the jurisdiction of ASTM Committee B07 on Light Metals and Alloys and is the direct responsibility of Subcommittee B07.01 on Aluminum Alloy Ingots and Castings.

Current edition approved Apr. 10, 2003. Published September 2003. Originally approved in 1918. Last previous edition approved in 2002 as B 26/B 26M – 02.

~~3.1.1~~ *Definitions*—Refer to Terminology B 881 for definitions of product terms used in this specification.

3.2 *sand casting*—a metal object produced by pouring molten metal into a sand mold and allowing it to solidify.

4. Ordering Information

4.1 Orders for material under this specification shall include the following information (1.~~3~~4 and 1.~~4~~5):

4.1.1 This specification designation (which includes the number, year, and revision letter, if applicable),

NOTE 1—For inch-pound application, specify Specification B 26 and for metric application specify Specification B 26M. Do not mix units.

4.1.2 The quantity in either pieces or pounds [kilograms].

4.1.3 Alloy (Section 7 and Table 1),

4.1.4 Temper (Section 12 and Table 2),

4.1.5 Applicable drawing or part number,

4.2 Additionally, orders for material to this specification shall include the following information when required by the purchaser:

4.2.1 Whether chemical analysis and tensile property reports are required (Table 1 and Table 2),

4.2.2 Whether castings or test bars, or both, may be artificially aged for Alloys 705.0-T5, 707.0-T5, 712.0-T5 and 713.0-T5 (12.2) and whether yield strength tests are required for these alloys,

4.2.3 Whether test specimens cut from castings are required in addition to or instead of separately cast specimens (Sections 12 and 15),

4.2.4 Whether repairs are permissible (18.1),

4.2.5 Whether inspection is required at the producer's works (Section 20),

4.2.6 Whether certification is required (23.1),

4.2.7 Whether surface requirements shall be checked against observational standards where such standards are established (21.1),

4.2.8 Whether liquid penetrant inspection is required (21.2),

4.2.9 Whether radiographic inspection is required (21.3), and

4.2.10 Whether foundry control is required (Section 11).

4.2.11 Whether Practice B 660 applies and, if so, the levels of preservation, packaging and packing required (25.4).

5. Quality Assurance

5.1 Unless otherwise specified in the contract or purchase order, the producer shall be responsible for the performance of all inspections and test requirements specified herein. Unless disapproved by the purchaser, the producer may use his own or any other suitable facilities for the performance of the inspection and test requirements specified herein. The purchaser shall have the right to perform any of the inspections and tests set forth in this specification where such inspections are deemed necessary to confirm that the material conforms to prescribed requirements.

6. Manufacture

6.1 The responsibility of furnishing castings that can be laid out and machined to the finished dimensions within the permissible variations specified, as shown on the blueprints or drawings, shall rest with the producer, except where pattern equipment is furnished by the purchaser.

7. Chemical Composition

7.1 The castings shall conform to the chemical composition limits prescribed in Table 1. Conformance shall be determined by the producer by analyzing samples taken at the time the castings are poured, or samples taken from castings or tension test specimens representative of castings. If the producer has determined the chemical composition of the material during the course of manufacture, he shall not be required to sample and analyze the finished product.

8. Sampling

8.1 A sample for determining of chemical composition shall be taken to represent the following:

8.1.1 Not more than 2000 lb ~~[917~~ [1000 kg] of clean castings (gates and risers removed) or a single casting poured from one furnace.

8.1.2 Castings poured continuously from one furnace for not more than 8 consecutive hours.

8.2 Samples for determination of chemical composition shall be taken in accordance with one of the following methods:

8.2.1 *Samples for Chemical Analysis*— Samples for chemical analysis shall be in accordance with Practice E 88 except that the weight of a prepared sample shall be not less than 75 g.

8.2.2 *Samples for Spectrochemical and Other Methods of Analysis*—Sampling for spectrochemical analysis shall be in accordance with Practices E 716. Samples for other methods of analysis shall be suitable for the form of material being analyzed and the type of analytical methods used.

9. Methods for Determination of Chemical Composition

9.1 The determination of chemical composition shall be made in accordance with suitable chemical (Test Methods E 34) or

TABLE 2 Tensile Requirements[A] (Inch-Pound Units)

NOTE 1—For purposes of determining conformance with this specification, each value for tensile strength and yield strength shall be rounded to the nearest 0.1 ksi and each value for elongation shall be rounded to the nearest 0.5 % , both in accordance with the rounding method of Practice E 29.

Alloy		Temper[B]	Tensile Strength, min, ksi	Yield Strength (0.2 % offset), min, ksi	Elongation in 2 in. or 4 x diameter, min, %	Typical Brinell Hardness,[C] 500 kgf, 10 mm
ANSI[D]	UNS					
201.0	A02010	T7	60.0	50.0	3.0	...
204.0	A02040	T4	45.0	28.0	6.0	...
~~208.0~~	~~A02080~~	~~F~~	~~19.0~~	~~12.0~~	~~1.5~~	~~55~~
~~222.0~~	~~A02220~~	~~O[E]~~	~~23.0~~	~~[F]~~	~~[F]~~	~~80~~
		~~T61~~	~~30.0~~	~~[F]~~	~~[F]~~	~~115~~
242.0	A02420	O[E]	23.0	[F]	[F]	70
		T61	32.0	20.0	[F]	105
A242.0	A12420	T75	29.0	[F]	1.0	75
295.0	A02950	T4	29.0	13.0	6.0	60
		T6	32.0	20.0	3.0	75
		T62	36.0	28.0	[F]	95
		T7	29.0	16.0	3.0	70
319.0	A03190	F	23.0	13.0	1.5	70
		T5	25.0	[F]	[F]	80
		T6	31.0	20.0	1.5	80
328.0	A03280	F	25.0	14.0	1.0	60
		T6	34.0	21.0	1.0	80
355.0	A03550	T6	32.0	20.0	2.0	80
		T51	25.0	18.0	[F]	65
		T71	30.0	22.0	[F]	75
C355.0	A33550	T6	36.0	25.0	2.5	...
356.0	A03560	F	19.0	9.5	2.0	55
		T6	30.0	20.0	3.0	70
		T7	31.0	[F]	[F]	75
		T51	23.0	16.0	[F]	60
		T71	25.0	18.0	3.0	60
A356.0	A13560	T6	34.0	24.0	3.5	80
		T61	35.0	26.0	1.0	...
443.0	A04430	F	17.0	7.0	3.0	40
B443.0	A24430	F	17.0	6.0	3.0	40
512.0	A05120	F	17.0	10.0	...	50
514.0	A05140	F	22.0	9.0	6.0	50
520.0	A05200	T4	42.0	22.0	12.0	75
535.0	A05350	F	35.0	18.0	9.0	70
705.0	A07050	T5	30.0	17.0[G]	5.0	65
707.0	A07070	T7	37.0	30.0[G]	1.0	80
710.0[H]	A07100	T5	32.0	20.0	2.0	75
712.0[H]	A07120	T5	34.0	25.0[G]	4.0	75
713.0	A07130	T5	32.0	22.0	3.0	75
771.0	A07710	T5	42.0	38.0	1.5	100
		T51	32.0	27.0	3.0	85
		T52	36.0	30.0	1.5	85
		T6	42.0	35.0	5.0	90
		T71	48.0	45.0	2.0	120
850.0	A08500	T5	16.0	[F]	5.0	45
851.0[H]	A08510	T5	17.0	[F]	3.0	45
852.0[H]	A08520	T5	24.0	18.0	[F]	60

[A] If agreed upon between the manufacturer and the purchaser, other mechanical properties may be obtained by other heat treatments such as annealing, aging, or stress relieving.
[B] Refer to ANSI H35.1 and/or H35.1M for description of tempers.
[C] For information only, not required for acceptance.
[D] ASTM alloy designations are recorded in Practice B 275.
[E] Formerly designated as 222.0-T2 and 242.0-T21.
[F] Not required.
[G] Yield strength to be determined only when specified in the contract or purchase order.
[H] 710.0 formerly A712.0, 712.0 formerly D712.0, 851.0 formerly A850.0, 852.0 formerly B850.0.

spectrochemical (Test Methods ~~E 227, E 607~~, E 607 and E 1251) methods. Other methods may be used only when no published ASTM method is available. In case of dispute, the method of analysis shall be agreed upon by the producer and the purchaser.

10. Material Requirements—Castings Produced for Governmental and Military Agencies

10.1 Unless otherwise specified, only aluminum alloy conforming to the requirements of Specification B 179 or producer's foundry scrap (identified as being made from alloy conforming to Specification B 179) shall be used in the remelting furnace from which molten metal is taken for pouring directly into castings. Additions of small amounts of modifiers and grain refining elements or alloys are permitted.

10.1.1 Pure materials, recycled materials, and master alloys may be used to make alloys conforming to this specification, provided chemical analysis can be taken and adjusted to conform to Table 1 prior to pouring any castings.

11. Foundry Control—Castings Produced for Governmental and/or Military Agencies

11.1 When specified, castings shall be produced under foundry control approved by the purchaser. Foundry control shall consist of examination of castings by radiographic or other approved methods for determining internal discontinuities until the gating, pouring, and other foundry practices have been established to produce castings meeting the quality standards furnished by the purchaser or agreed upon between the purchaser and the producer. When foundry practices have been so established, the production method shall not be significantly changed without demonstrating to the satisfaction of the purchaser that the change does not adversely affect the quality of the castings. Minor changes in pouring temperature of ±50°F [±28°C] from the established nominal temperature are permissible.

12. Tensile Properties

12.1 The separately cast test specimens representing the castings shall meet the mechanical properties prescribed in Table 2.

12.2 Although Alloys 705.0, 707.0, 712.0, and 713.0 are most frequently used in the naturally aged condition, by agreement between the producer and the purchaser, the castings may be artificially aged to the T5 temper. The producer and the purchaser may also agree to base the acceptance of castings on artificially aged test bars. The conditions of artificial aging shown in Practice B 917/B 917M shall be employed unless other conditions are accepted by mutual consent.

12.3 When specified, the tensile strength, yield strength, and elongation values of specimens cut from castings shall be not less than 75 % of the tensile and yield strength values and not less than 25 % of the elongation values specified in Table 2 [Table 3]. The measurement of the elongation is not required for test specimens cut from castings if 25 % of the specified minimum elongation value published in Table 2 [Table 3] is 0.5 % or less. If grade D quality castings as described in Table 4 are specified, no tensile tests shall be specified nor tensile requirements be met on specimens cut from castings.

13. Workmanship, Finish, and Appearance

13.1 The finished castings shall be uniform in composition and free of blowholes, cracks, shrinks, and other discontinuities except as designated and agreed upon as acceptable by the purchaser.

14. Number of Tests and Retests

14.1 Unless otherwise agreed upon between the purchaser and producer, a minimum of two tension test specimens shall be separately cast and tested to represent the following:

14.1.1 Not more than 4000 lb ~~[1814~~ [2000 kg] of clean castings (gates and risers removed) or a single casting poured from one furnace.

14.1.2 The castings poured continuously from one furnace in not more than eight consecutive hours.

14.2 When tensile properties from castings are to be determined, one per melt-heat combination shall be tested unless otherwise shown on the drawing or specified in the purchase order.

14.3 If any test specimen shows defective machining or flaws, it may be discarded; in which case the purchaser and the producer shall agree upon the selection of another specimen in its stead.

14.4 If the results of the tension tests do not conform to the requirements prescribed in Table 2 [Table 3]; the test bars representative of the castings may be retested in accordance with the replacement tests and retest provisions of Test Methods B 557 and B 557M, and the results of retests shall conform to the requirements as to mechanical properties specified in Table 2 [Table 3].

15. Specimen Preparation

15.1 The tension test specimens shall be cast to size in sand without chills in accordance with the dimensions shown in Fig. 1 [Fig. 2]. They shall not be machined prior to test except to adapt the grip ends in such a manner as to ensure axial loading.

15.2 The recommended method for casting tension test specimens is shown in Fig. 1 [Fig. 2].

15.3 When properties of castings are to be determined, tension test specimens shall be cut from the locations designated on the drawing, unless otherwise negotiated. If no locations are designated, one or more specimens shall be taken to include locations having significant variation in casting thickness, except that specimens shall not be taken from areas directly under risers. The tension test specimens shall be the standard 0.500-in. [12.5-mm] diameter specimens shown in Fig. 8 of Test Methods B 557 and B 557M or a round specimen of smaller size proportional to the standard specimen. In no case shall the dimensions of the smallest specimen be less than the following:

TABLE 3 Tensile Requirements (SI Units)—[Metric][A]

NOTE 1—For purposes of determining conformance with this specification, each value for tensile strength and yield strength shall be rounded to the nearest 1 MPa and each value for elongation shall be rounded to the nearest 0.5 %, both in accordance with the rounding method of Practice E 29.

Alloy		Temper[B]	Tensile Strength, min, MPa[C]	Yield Strength (0.2 % offset), min, MPa[C]	Elongation in 5× diameter, min %	Typical Brinell Hardness,[D] 500 kgf, 10 mm
ANSI[E]	UNS					
201.0	A02010	T7	415	345	3.0	...
204.0	A02040	T4	310	195	6.0	...
~~208.0~~	~~A02080~~	~~F~~	~~130~~	~~85~~	~~1.5~~	~~55~~
~~222.0~~	~~A02220~~	~~O[F]~~	~~160~~	~~[G]~~	~~[G]~~	~~80~~
		~~T61~~	~~205~~	~~[G]~~	~~[G]~~	~~115~~
242.0	A02420	O[F]	160	[G]	[G]	70
		T61	220	140	[G]	105
A242.0	A12420	T75	200	[G]	1.0	75
295.0	A02950	T4	200	90	6.0	60
		T6	220	140	3.0	75
		T62	250	195	[G]	95
		T7	200	110	3.0	70
319.0	A03190	F	160	90	1.5	70
		T5	170	[G]	[G]	80
		T6	215	140	1.5	80
328.0	A03280	F	170	95	1.0	60
		T6	235	145	1.0	80
355.0	A03550	T6	220	140	2.0	80
		T51	170	125	[G]	65
		T71	205	150	[G]	75
C355.0	A33550	T6	250	170	2.5	...
356.0	A03560	F	130	65	2.0	55
		T6	205	140	3.0	70
		T7	215	[G]	[G]	75
		T51	160	110	[G]	60
		T71	170	125	3.0	60
A356.0	A13560	T6	235	165	3.5	80
		T61	245	180	1.0	...
443.0	A04430	F	115	50	3.0	40
B443.0	A24430	F	115	40	3.0	40
512.0	A05120	F	115	70	...	50
514.0	A05140	F	150	60	6.0	50
520.0	A05200	T4	290	150	12.0	75
535.0	A05350	F	240	125	9.0	70
705.0	A07050	T5	205	115[H]	5.0	65
707.0	A07070	T7	255	205[H]	1.0	80
710.0[I]	A07100	T5	220	140	2.0	75
712.0[I]	A07120	T5	235	170[H]	4.0	75
713.0	A07130	T5	220	150	3.0	75
771.0	A07710	T5	290	260	1.5	100
		T51	220	185	3.0	85
		T52	250	205	1.5	85
		T6	290	240	5.0	90
		T71	330	310	2.0	120
850.0	A08500	T5	110	[G]	5.0	45
851.0[I]	A08510	T5	115	[G]	3.0	45
852.0[I]	A08520	T5	165	125	[G]	60

[A] If agreed upon between the manufacturer and the purchaser, other mechanical properties may be obtained by other heat treatments such as annealing, aging, or stress relieving.

[B] Temper designations:

F As fabricated.
O Annealed.
T1 Cooled from an elevated temperature shaping process and naturally aged to a substantially stable condition.
T4 Solution heat-treated and naturally aged to a substantially stable condition.
T5 Cooled from an elevated temperature shaping process and then artificially aged.
T6 Solution heat-treated and then artificially aged.
T7 Solution heat-treated and stabilized.

Additional digits, the first of which shall not be zero, may be added to designation T1 through T10 to indicate a variation in treatment that significantly alters the characteristics of the product.

[C] For explanation of the SI unit "MPa" see Appendix X2.

[D] For information only, not required for acceptance.

[E] ASTM alloy designations are recorded in Practice B 275.

[F] Formerly designated as 222.0-T2 and 242.0-T21.

[G] Not required.

[H] Yield strength to be determined only when specified in the contract or purchase order.

[I] 710.0 formerly A712.0, 712.0 formerly D712.0, 851.0 formerly A850.0, 852.0 formerly B850.0.

TABLE 4 Discontinuity-Level Requirements for Aluminum Sand Castings (Reference Radiographs E 155)

Discontinuity	Radiograph	Section Thickness in. [mm]							
		Grade A[A]		Grade B		Grade C		Grade D	
		¼ [6.4]	¾ [19.0]	¼ [6.4]	¾ [19.0]	¼ [6.4]	¾ [19.0]	¼ [6.4]	¾ [19.0]
Gas holes	1.1	none		1	1	2	2	5	5
Gas porosity (round)	1.21	none		1	1	3	3	7	7
Gas porosity (elongated)	1.22	none		1	1	3	4	5	5
Shrinkage cavity	2.1	none		1	[B]	2	[B]	3	[B]
Shrinkage porosity or sponge	2.2	none		1	1	2	2	4	3
Foreign material (less dense material)	3.11	none		1	1	2	2	4	4
Foreign material (more dense material)	3.12	none		1	1	2	1	4	3
Segregation	3.2	none		none		none		none	
Cracks	...	none		none		none		none	
Cold shuts	...	none		none		none		none	
Surface irregularity	...	...		not to exceed drawing tolerance					
Core shift	...	...		not to exceed drawing tolerance					

[A] Caution should be exercised in requesting Grade A.
[B] Not available.

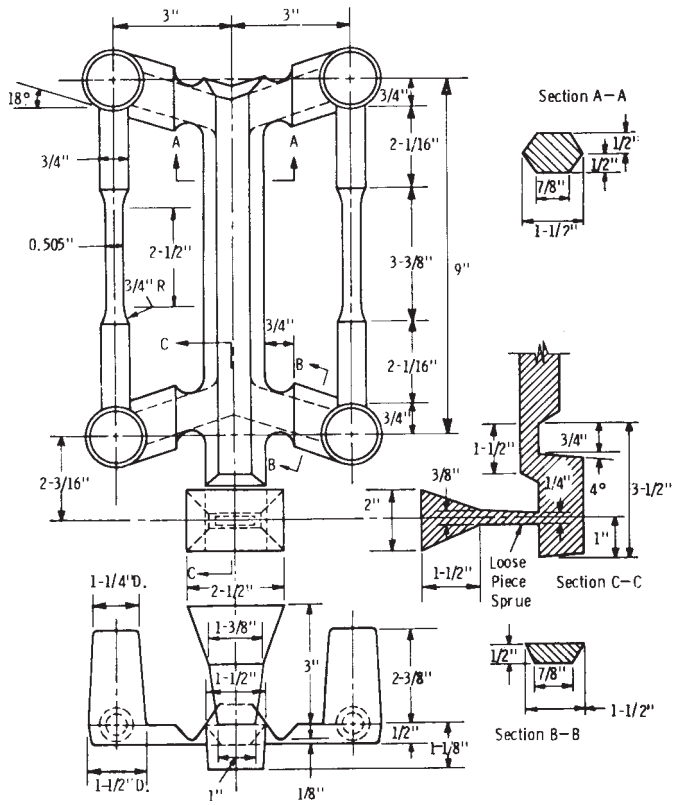

NOTE 1—1 in. = 25.4 mm.

FIG. 1 Tension Test Specimen Casting

	in.	mm
Diameter of reduced section	0.250	6.00
Length of reduced section	1¼	36
Gage length	1.000	30.00
Radius of fillet	3/16	6
Diameter of end section	⅜	9
Overall length:		
With shouldered ends	2⅜	60
With threaded ends	3	75
With plain cylindrical ends	4	100

When necessary, a rectangular specimen may be used proportional to that shown for the 0.500-in. [12.5-mm] wide specimen in Fig. 6 of Test Methods B 557 and B 557M, but in no case shall its dimensions be less than the following:

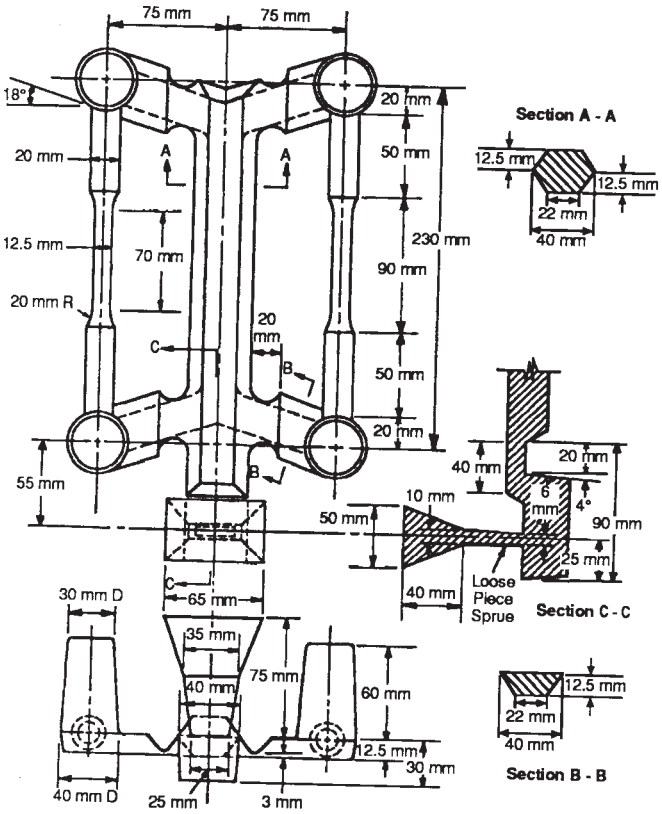

FIG. 2 Tension Test Specimen Casting [Metric]

	in.	mm
Width of reduced section	¼	6.00
Length of reduced section	1¼	32
Radius of fillet	¼	6
Overall length	4	100
Thickness	0.100	2.50

The specific elongation values shall not apply to tests of rectangular specimens.

15.4 If the castings are to be heat treated and separately cast specimens are to be used, the specimens representing such castings shall be heat treated with the castings they represent. If castings are to be heat treated and tests are to be obtained on the castings, the test specimens shall be taken from the castings after heat treatment.

16. Test Methods

16.1 The determination of chemical composition shall be made in accordance with suitable chemical (Test Methods E 34), or spectrochemical (Test Methods ~~E 227,~~ E 607 and E 1251), methods. Other methods may be used only when no published ASTM method is available. In case of dispute, the methods of analysis shall be agreed upon between the producer and purchaser.

16.2 The tensile properties shall be determined in accordance with Test Methods B 557 and B 557M.

17. Heat Treatment

17.1 ~~Wh~~Heat treatment of castings ~~are to be heat treated, the practices~~ shall be performed in accordance with Practice ~~B 917/B 917M. Heat treatment shall be performed on the whole castings and never on a portion.~~ B 917/B 917M or AMS 2771.

18. Repair of Castings

18.1 Castings may be repaired only by processes approved and agreed upon between the producer and purchaser, that is, welding, impregnation, peening, blending, soldering, ~~etc.~~ and so forth. Limitations on the extent and frequency of such repairs, and methods of inspection of repaired areas should also be agreed upon.

19. Repairing of Castings—Produced for Governmental and Military Agencies

19.1 *Welding*:

19.1.1 When welding is permitted, it shall be done by methods suitable for the particular alloy. Welding methods shall be in accordance with such specifications as are referenced on the applicable drawings, or as are required by the contract or order.

19.1.2 All welding shall be done by qualified welders approved by the purchaser.

19.1.3 When castings are to be supplied in the heat-treated condition, they shall be heat treated to the required temper after welding, except that small arc welds may be performed without subsequent heat treatment upon approval of the purchaser.

19.1.4 Unless otherwise specified, castings that have been repaired by welding shall have the welded areas examined radiographically after all reworking and heat treatment have been completed.

19.1.5 All welds shall be free of cracks, excess gas, porosity, lack of fusion and meet the same quality requirements as the parent material.

19.1.6 Welded castings shall be marked with a symbol of three concentric circles with a letter or number designating the welder adjacent to the symbol. The outer circle of the symbol shall be not larger than ¼ in. [6 mm] in outside diameter. All welded areas shall be encircled with a ring of white paint prior to submission for final inspection.

19.1.7 *Naval Shipboard Applications*—Repair welding of castings used in Naval shipboard pressure vessels, piping systems and machinery shall be performed in accordance with requirements for repair of castings specified in ~~MIL-STD-278.~~ NAVSEA Technical Publication S9074-AR-GIB-010/278.

19.2 *Impregnation*—When impregnation is permitted, it shall be to correct general seepage leaks only and shall not be used to correct poor foundry technique or significant porosity. It shall be accomplished in accordance with ~~MIL-STD-276 or, when specified MIL-I-13857.~~ MIL-STD-276. Unless otherwise authorized by the purchaser, castings which have been impregnated shall be marked "IMP."

19.3 *Peening*—When peening is permitted, it shall be to correct localized minor seepage leaks and small surface imperfections only, or to disclose subsurface voids for purpose of inspection. Peening will not be permitted to repair cracks, cold shuts, shrinks, misruns, defects due to careless handling, or other similar major defects. Peening may be accomplished either hot or cold and shall be performed by methods which are acceptable to the purchaser. Peened castings shall be marked with Maltese cross approximately ¼ in. [6 mm] high.

19.4 *Blending*—Blending with suitable grinders or other tools will be permitted for the removal of surface imperfections only, and shall not result in dimensions outside the tolerances shown on the applicable drawing.

20. Source Inspection

20.1 If the purchaser elects to make an inspection of the casting at the producer's works, it shall be so stated in the contract or order.

20.2 If the purchaser elects to have inspection made at the producer's works, the producer shall afford the inspector all reasonable facilities to satisfy him that the material is being furnished in accordance with this specification. All tests and inspection shall be so conducted as not to interfere unnecessarily with the operation of the works.

21. Foundry Inspection

21.1 Requirements such as surface finish, parting line projections, snagging projections where gates and risers were removed, ~~etc.,~~ and so forth, may be checked visually. It is advisable to have agreed-upon observational standards representing both acceptable and unacceptable material.

21.2 *Liquid Penetrant Inspection* :

21.2.1 When specified, liquid penetrant inspection shall be in accordance with Test Method E 165, and the required sensitivity shall be specified.

21.2.2 Acceptance standards for discontinuities shall be agreed upon, including size and frequency per unit area and location.

21.3 *Radiographic Inspection*:

21.3.1 When specified, radiographic inspection shall be in accordance with Guide E 94 and Reference Radiographs E 155.

21.3.2 Radiographic acceptance shall be in accordance with requirements selected from Table 4. Any modifications of this table and the frequency per unit area and location should also be agreed upon.

21.3.3 The number, film size, and orientation of radiographs and the number of castings radiographically inspected shall be agreed upon between the manufacturer and purchaser.

22. Rejection and Rehearing

22.1 Castings that show unacceptable defects revealed by operations subsequent to acceptance and within an agreed time may be rejected, and shall be replaced by the producer.

22.2 In the case of dissatisfaction regarding rejections based on chemical composition and mechanical properties specified in Section 7 and 12, respectively, the producer may make claim for rehearing as the basis of arbitration within a reasonable time after receipt by the producer of the rejection notification.

23. Certification

23.1 The producer shall, on request, furnish to the purchaser a certificate stating that each lot has been sampled, tested, and inspected in accordance with this specification, and has met the requirements.

24. Identification and Repair Marking—Castings Produced for Government and Military Agencies

24.1 *Identification*—Unless otherwise specified, each casting shall be marked with the applicable drawing or part number. The

marking shall consist of raised Arabic numerals, and when applicable capital letters, cast integral. The location of the identification marking shall be as specified on the applicable drawing. When the location is not specified on the drawing, the drawing/part number shall be placed in a location mutually agreeable to the purchaser and producer.

24.1.1 *Lot Identification*—When practicable, each casting shall also be marked with the melt of inspection lot number.

24.2 *Lot*—A lot shall consist of all of the cleaned castings poured from the same heat or melt when subsequent heat treatment is not required.

24.2.1 When the castings consist of alloys which require heat treatment, the lot shall consist of all castings from the same melt or heat which have been heat treated in the same furnace charge, or if heat treated in a continuous furnace, all castings from the same melt or heat that are discharged from the furnace during a 4-h period.

24.3 *Repair Markings*—All identification markings indicating repairs as specified in 19.1.6, 19.2, and 19.3, shall be made with a waterproof marking fluid.

25. Packaging, Marking, and Shipping

25.1 The material shall be packaged in such a manner as to prevent damage in ordinary handling and transportation. The type of packaging and gross weight of individual containers shall be left to the discretion of the producer unless otherwise agreed upon. Packaging methods and containers shall be so selected as to permit maximum utility of mechanical equipment in unloading and subsequent handling. Each package or container shall contain only one size, alloy, and temper of material when packaged for shipment unless otherwise agreed upon.

25.2 Each package or container shall be marked with the purchase order number, drawing number, quantity, specification number, alloy and temper, gross and net weights, and the name of the producer.

25.3 Packages or containers shall be such as to ensure acceptance by common or other carriers for safe transportation at the lowest rate to the point of delivery.

25.4 When specified in the contract or purchase order, material shall be preserved, packaged and packed in accordance with the requirements of Practices B 660. The applicable levels shall be as specified in the contract or order. Marking for shipment of such material shall be in accordance with Fed. Std. No. 123 or Practice D 3951 for civil agencies and MIL-STD-129 for military agencies.

26. Keywords

26.1 aluminum; sand casting

ANNEXES

(Mandatory Information)

A1. BASIS FOR INCLUSION OF PROPERTY LIMITS

A1.1 Limits are established at a level at which a statistical evaluation of the data indicates that 99 % of the population obtained from all standard material meets the limit with 95 % confidence. For the products described, mechanical property limits for the respective size ranges are based on the analyses of at least 100 data from standard production material with no more than ten data from a given lot. All tests are performed in accordance with the appropriate ASTM test methods. For informational purposes, refer to "Statistical Aspects of Mechanical Property Assurance" in the Related Material section of the *Annual Book of ASTM Standards*, Vol 02.02.

A2. ACCEPTANCE CRITERIA FOR INCLUSION OF NEW ALUMINUM AND ALUMINUM ALLOYS IN THIS SPECIFICATION

A2.1 Prior to acceptance for inclusion in this specification, the composition of wrought or cast aluminum or aluminum alloy shall be registered in accordance with ANSI H35.1 or H35.1(M). The Aluminum Association[12] holds the Secretariat of ANSI H35 Committee and administers the criteria and procedures for registration.

A2.2 If it is documented that the Aluminum Association could not or would not register a given composition, an alternative procedure and the criteria for acceptance shall be as follows:

A2.2.1 The designation submitted for inclusion does not utilize the same designation system as described in ANSI H35.1 or H35.1(M). A designation not in conflict with other designation systems or a trade name is acceptable.

[12] The Aluminum Association, 900 19th Street, NW, Washington, DC 20006.

A2.2.2 The aluminum or aluminum alloy has been offered for sale in commercial quantities within the prior twelve months to at least three identifiable users.

A2.2.3 The complete chemical composition limits are submitted.

A2.2.4 The composition is, in the judgement of the responsible subcommittee, significantly different from that of any other aluminum or aluminum alloy already in the specification.

A2.2.5 For codification purposes, an alloying element is any element intentionally added for any purpose other than grain refinement and for which minimum and maximum limits are specified. Unalloyed aluminum contains a minimum of 99.00 % aluminum.

A2.2.6 Standard limits for alloying elements and impurities are expressed to the following decimal places:

Less than 0.001 %		0.000X
0.001 to but less than 0.01 %		0.00X
0.01 to but less than 0.10 %		
	Unalloyed aluminum made by a refining process	0.0XX
	Alloys and unalloyed aluminum not made by a refining process	0.0X
0.10 through 0.55 %		0.XX
	(It is customary to express limits of 0.30 through 0.55 % as 0.X0 or 0.X5.)	
Over 0.55 %		0.X, X.X, etc.
	(except that combined Si + Fe limits for 99.00 % minimum aluminum must be expressed as 0.XX or 1.XX)	

A2.2.7 Standard limits for alloying elements and impurities are expressed in the following sequence: Silicon; Iron; Copper; Manganese; Magnesium; Chromium; Nickel; Zinc (Note A2.1); Titanium; Other Elements, Each; Other Elements, Total; Aluminum (Note A2.2).

NOTE A2.1—Additional specified elements having limits are inserted in alphabetical order of their chemical symbols between zinc and titanium, or are specified in footnotes.

NOTE A2.2—Aluminum is specified as *minimum* for unalloyed aluminum and as a *remainder* for aluminum alloys.

APPENDIXES

(Nonmandatory Information)

X1. ALLOY PROPERTIES AND CHARACTERISTICS

X1.1 The data in Table X1.1 are approximate and are supplied for general information only.

X2. SI UNITS

X2.1 The SI unit for strength properties now shown is in accordance with the International System of Units (SI) (IEEE/ASTM SI 10). The derived SI unit for force is the newton (N), which is defined as that force which when applied to a body having a mass of one kilogram gives it an acceleration of one metre per second squared ($N = kg \cdot m/s^2$). The derived SI unit for pressure or stress is the newton per square metre (N/m^2), which has been named the pascal (Pa) by the General Conference on Weights and Measures. Since 1 ksi = 6 894 757 Pa, the metric equivalents are expressed as megapascal (MPa), which is the same as MN/m^2 and N/mm^2.

TABLE X1.1 Properties and Characteristics

NOTE 1—1 indicates best of group, 5 indicates poorest of group.

Alloy		Pattern Shrinkage Allowance,[A] in./ft [mm/m]	Approximate Melting Range,[B] °F [°C]	Resistance to Hot Cracking[C]	Pressure Tightness	Fluidity[D]	Solidification Shrinkage Tendency[E]	Normally Heat Treated	Resistance to Corrosion[F]	Machining[G]	Polishing[H]	Electroplating[I]	Anodizing (Appearance)[J]	Chemical Oxide Coating (Protection)[K]	Strength at Elevated Temperature[L]	Suitability for Welding[M]	Suitability for Brazing[N]
ANSI[O]	UNS																
201.0	A02010	[13]	1060–1200 [571–649]	4	3	3	4	yes	4	1	1	1	2	2	1	4	no
204.0	A02040	5/32 [13]	985–1200 [529–649]	4	3	3	4	yes	4	1	2	1	3	4	1	4	no
~~208.0~~	~~A02080~~	~~5/32 [13]~~	~~970–1160 [521–627]~~	~~2~~	~~2~~	~~2~~	~~2~~	~~yes~~	~~4~~	~~3~~	~~3~~	~~2~~	~~3~~	~~3~~	~~3~~	~~2~~	~~no~~
~~222.0~~	~~A02220~~	~~5/32 [13]~~	~~965–1155 [518–624]~~	~~3~~	~~3~~	~~3~~	~~3~~	~~yes~~	~~4~~	~~1~~	~~2~~	~~1~~	~~3~~	~~4~~	~~1~~	~~4~~	~~no~~
242.0	A02420	5/32 [13]	990–1175 [532–635]	4	3	3	4	yes	4	2	2	1	3	4	1	4	no
295.0	A02950	5/32 [13]	970–1190 [521–643]	4	4	3	3	yes	3	2	2	1	2	3	3	3	no
319.0	A03190	5/32 [13]	950–1125 [510–607]	2	2	2	2	yes	3	3	4	2	4	3	3	2	no
328.0	A03280	5/32 [13]	960–1135 [516–613]	1	1	1	1	yes	3	4	5	2	4	2	2	2	no
355.0	A03550	5/32 [13]	1015–1150 [546–621]	1	1	1	1	yes	3	3	3	1	4	2	2	2	no
C355.0	A33550	5/32 [13]	1015–1150 [546–621]	1	1	1	1	yes	3	3	3	1	4	2	2	2	no
356.0	A03560	5/32 [13]	1035–1135 [557–613]	1	1	1	1	yes	2	4	5	2	4	2	3	2	no
A356.0	A13560	5/32 [13]	1035–1135 [557–613]	1	1	1	1	yes	2	4	5	2	4	2	3	2	no
443.0	A04430	5/32 [13]	1065–1170 [574–632]	1	1	1	1	no	3	5	5	2	5	2	4	1	ltd
B443.0	A24430	5/32 [13]	1065–1170 [574–632]	1	1	1	1	no	2	5	5	2	5	2	4	1	ltd
514.0	A05140	5/32 [13]	1110–1185 [599–640]	4	5	5	5	no	1	1	1	5	1	1	2	4	no
520.0	A05200	1/10 [8]	840–1120 [449–604]	2	5	4	5	yes	1	1	1	4	1	1	[P]	5	no
535.0	A05350	5/32 [13]	1020–1165 [549–629]	3	5	5	5	no	1	1	1	5	1	1	3	4	no
705.0	A07050	3/16 [16]	1105–1180 [596–638]	5	3	4	4	aged only	2	1	1	3	2	2	5	4	yes
707.0	A07070	3/16 [16]	1085–1165 [585–629]	5	3	4	4	yes	2	1	1	3	2	2	5	4	yes
710.0[Q]	A07100	3/16 [16]	1105–1195 [596–646]	5	3	4	4	aged only	2	1	1	2	2	3	5	4	yes
712.0[Q]	A07120	3/16 [16]	1110–1185 [599–641]	5	3	4	4	aged only	2	1	1	2	2	3	5	4	yes
713.0	A07130	3/16 [16]	1100–1185 [593–641]	5	3	4	4	aged only	2	1	1	2	2	3	5	4	yes
771.0	A07710	3/16 [16]	1120–1190 [604–643]	5	3	4	4	yes	2	1	1	3	2	2	5	4	yes
850.0	A08500	5/32 [13]	435–1200 [224–649]	5	5	5	5	aged only	3	1	1	5	4	5	[P]	5	no
851.0[Q]	A08510	5/32 [13]	440–1165 [227–629]	4	4	5	4	aged only	3	1	1	5	4	5	[P]	5	no
852.0[Q]	A08520	5/32 [13]	400–1175 [204–635]	5	5	5	5	aged only	3	1	1	5	4	5	[P]	5	no

[A] Allowances for average castings. Shrinkage requirements will vary with intricacy of design and dimensions.
[B] Temperatures of solids and liquids are indicated; pouring temperatures will be higher.
[C] Ability of alloy to withstand contraction stresses while cooling through hot-short or brittle-temperature range.
[D] Ability of liquid alloy to flow readily in mold and fill thin sections.
[E] Decreased in volume accompanying freezing of alloy and measure of amount of compensating feed metal required in form of risers.
[F] Based on alloy resistance in standard-type salt-spray test.
[G] Composite rating based on ease of cutting, chip characteristics, quality of finish, and tool life. Ratings, in the case of heat-treatable alloys, based on a -T6 temper. Other tempers, particularly the annealed temper, may have lower rating.
[H] Composite rating based on ease and speed of polishing and quality of finish provided by typical polishing procedure.
[I] Ability of casting to take and hold an electroplate applied by present standard methods.
[J] Rated on lightness of color, brightness, and uniformity of clear anodized coating applied in sulfuric acid electrolyte.
[K] Rated on combined resistance of coating and base alloy to corrosion.
[L] Rating based on tensile and yield strengths at temperatures up to 500°F [260°C], after prolonged heating at testing temperature.
[M] Based on ability of material to be fusion welded with filler rod of same alloy.
[N] Refers to suitability of alloy to withstand brazing temperatures without excessive distortion or melting.
[O] ASTM alloy designations are recorded in Practice B 275.
[P] Not recommended for service at elevated temperatures.
[Q] 710.0 formerly A712.0, 712.0 formerly D712.0, 851.0 formerly A850.0, 852.0 formerly B850.0.

X3. INACTIVE ALLOYS

X3.1 Alloys listed as inactive by the Aluminum Association—208.0 and 222.0. Listing the composition limits, mechanical properties, and characteristics of the alloys is a method of preserving this data should it be needed at some future date.

TABLE X3.1 Chemical Composition Limits–Inactive Alloys

NOTE 1—All applicable notes and footnotes can be found in Table 1

Alloy		Aluminum	Composition, (Values in Weight Percent)										Others	
ANSI	UNS		Silicon	Iron	Copper	Man-ganese	Magne-sium	Chromium	Nickel	Zinc	Tin	Titanium	Each	Total
208.0	A02080	remainder	2.5-3.5	1.2	3.5-4.5	0.50	0.10	...	0.35	1.0	...	0.25	...	0.50
222.0	A02220	remainder	2.0	1.5	9.2-10.7	0.50	0.15-0.35	...	0.50	0.8	...	0.25	...	0.35

TABLE X3.2 Tensile Requirements (Inch-Pound Units)–Inactive Alloys

NOTE 1—All applicable notes and footnotes can be found in Table 2.

Alloy		Temper	Tensile Strength, min, ksi	Yield Strength (0.2 % offset), min, ksi	Elongation in 2 in. or 4 x diameter, min, %	Typical Brinell Hard-ness, 500 kgf, 10 mm
ANSI	UNS					
208.0	A02080	F	19.0 (131)	120 (83)	1.5	55
222.0	A02220	O	23.0 (159)			80
		T6	30.0 (207)			115

TABLE X3.3 Properties and Characteristics–Inactive Alloys

NOTE 1—1 indicates best of group, 5 indicates poorest of group.
NOTE 2—All applicable notes and footnotes can be found in Table X1.1.

Alloy		Pattern Shrinkage Allowance,[A] in./ft [mm/m]	Approximate Melting Range,[B] °F [°C]	Resistance to Hot Cracking[C]	Pressure Tightness	Fluidity[D]	Solidification Shrinkage Tendency[E]	Normally Heat Treated	Resistance to Corrosion[F]	Machining[G]	Polishing[H]	Electroplating[I]	Anodizing (Appearance)[J]	Chemical Oxide Coating (Protection)[K]	Strength at Elevated Temperature[L]	Suitability for Welding[M]	Suitability for Brazing[N]
ANSI[O]	UNS																
208.0	A02080	5/32 [13]	970-1160 [521-627]	2	2	2	2	yes	4	3	3	2	3	3	3	2	no
222.0	A02220	5/32 [13]	965-1155 [518-624]	3	3	3	3	yes	4	1	2	1	3	4	1	4	no

SUMMARY OF CHANGES

Committee B07 has identified the location of selected changes to this standard since the last issue (B 26/B 26M – 0~~1~~2) that may impact the use of this standard. (Approved April 10, 2003.)

(1) Added new section 2.3, *AMS Standards*, and added reference to AMS 2771.
(2) Section 12.2 revised to reference B 917/B 917M and AMS 2771.
(3) Section 17.1 revised to reference B 917/B 917M and AMS 2771.
(4) New sections 1.2 and 3.1 added.
(5) New Appendix X3 added.
(6) Alloys 208.0 and 222.0 removed from Table 1, Table 2, Table 3, and Table X1.1 and placed in "Inactive Alloys" Tables in X3.1.
(7) Metric equivalents adjusted in sections 8.1.1 and 14.1.1.
(8) Terminology B 881 added to Section 2.
(9) Removed references to Test Method E 227 from 2.2, 9.1, and 16.1.
(10) Removed references to MIL-I-13857 from 2.6 and 19.2.
(11) Replaced MIL-STD-278 with NAVSEA Technical Publication S9074-AR-GIB-010/278 in 19.1.7.
(12) Added references to Practice D 3951 in 2.2 and 25.4.
(13) Added 1.7, safety caveat.

Committee B07 has identified the location of selected changes to this standard since the last issue (B 26/B 26M – 01) that may impact the use of this standard. (Approved Oct. 10, 2002.)

(1) References to Practice B 597 were replaced with Practice B 917/B 917M in Section 2, 12.2 and 17.1.
(2) A column in Table 2 was changed to read "Elongation in 2 in. or 4 x diameter, min, %".

ASTM International takes no position respecting the validity of any patent rights asserted in connection with any item mentioned in this standard. Users of this standard are expressly advised that determination of the validity of any such patent rights, and the risk of infringement of such rights, are entirely their own responsibility.

This standard is subject to revision at any time by the responsible technical committee and must be reviewed every five years and if not revised, either reapproved or withdrawn. Your comments are invited either for revision of this standard or for additional standards and should be addressed to ASTM International Headquarters. Your comments will receive careful consideration at a meeting of the responsible technical committee, which you may attend. If you feel that your comments have not received a fair hearing you should make your views known to the ASTM Committee on Standards, at the address shown below.

This standard is copyrighted by ASTM International, 100 Barr Harbor Drive, PO Box C700, West Conshohocken, PA 19428-2959, United States. Individual reprints (single or multiple copies) of this standard may be obtained by contacting ASTM at the above address or at 610-832-9585 (phone), 610-832-9555 (fax), or service@astm.org (e-mail); or through the ASTM website (www.astm.org).