DESIGN CRITERIA

THE CONSTRUCTION FOR SAID RESIDENCE, WHERE Vult WIND SPEED IS 140 MILES PER HOUR AND Vasd WIND SPEED IS 130 MPH, WIND EXPOSURE ZONE C, IS DESIGNED IN ACCORDANCE WITH: AMERICAN FOREST AND PAPER ASSOCIATION (AF&PA) WOOD FRAME CONSTRUCTION MANUAL FOR ONE AND TWO FAMILY DWELLINGS (WFCM) 2001 EDITION AS WELL AS THE INTERNATIONAL RESIDENTIAL CODE (IRC) 2021 EDITION. STRUCTURE SHALL BE BUILT TO THE 2021 INTERNATIONAL ENERGY CONSERVATION CODE (2021 IECC) AND STATE AMENDMENTS ADOPTED JULY 1, 2023.

PILING COUNT

18 PILING COUNT

FOUNDATION NOTES

1. ALL DIMENSIONS ARE EDGE OF CONCRETE (EOC) TO EDGE OF CONCRETE (EOC) UNLESS NOTED OTHERWISE.
2. VERIFY ALL PLUMBING ROUGH-IN LOCATIONS ON ARCHITECTURAL DWGS.
3. CONCRETE MIX SHALL HAVE A MINIMUM COMPRESSIVE STRENGTH OF 4000 PSI AT 28 DAYS. CONCRETE MIX SHALL BE IN ACCORDANCE WITH ACI-318.
4. ALL CONVENTIONAL REINFORCING STEEL SHALL MEET ASTM-A615 (GRADE 60).
5. TWO LAYER OF POLYETHYLENE VAPOR BARRIER SHALL BE PLACED UNDER ALL CONCRETE. VAPOR RETARDER TO BE MINIMUM 10 MIL, THICKNESS; ASTM E 1745 CLASS A, PERMEANCE LESS THAN 0.01 PERMS, EQUAL TO STEGO INDUSTRIES STEGO WRAP, ECOSHIELD-E 15 MIL BY EPRO, OR IRONBAR 15 BY FLATIRON FILMS. PROVIDE APPROPRIATE ACCESSORIES FOR A COMPLETE SYSTEM.
6. ALL MESH SHALL BE SECURELY SUPPORTED TO PREVENT BOTH VERTICAL AND HORIZONTAL MOVEMENT DURING CONCRETE PLACEMENT.
7. THE CONTRACTOR SHALL VERIFY ALL DROPS, OFFSETS, BRICK LEDGES, DIMENSIONS AND CONFIGURATIONS. CONTRACTOR MUST BE RESPONSIBLE FOR SAME. SEE ARCHITECTURAL DRAWINGS.
8. FILL, AS A MINIMUM QUALITY, SHALL BE 40% CLAY AND 60% SANDY MIXTURE, PLACED IN 6" LIFTS AND COMPACTED TO A MINIMUM OF 95% STANDARD PROCTOR. FOOTINGS ARE DESIGNED TO USE SOIL WITH A BEARING PRESSURE OF 2000 LBS. PER SQUARE FOOT OR MORE. IT IS RECOMMENDED THAT THE OWNER VERIFY ALLOWABLE SOIL BEARING PRESSURE CAPACITY BY CONTRACTING THE SERVICES OF A SOILS ENGINEERING COMPANY.
9. ALL SOIL BELOW SLAB SHALL RECEIVE TERMITE TREATMENT.

PILING NOTES

1. PILES ARE TO BE 30 FT. IN LENGTH WITH A 6 INCH TIP AND 8" BUTT. DRIVEN TO REFUSAL.
2. ALL PILES SHALL BE PRESSURE-TREATED ROUND TIMBER PILES CONFORMING TO ASTM D25.
2. DESIGN LOAD = 5 TONS PER PILE.
3. NO FIELD SUPERVISION OR INSPECTION PROVIDED UNDER THIS SEAL UNLESS OTHERWISE NOTED.
4. PILE LAYOUT MAY BE MODIFIED DUE TO ACTUAL DRIVING CONDITIONS. ENGINEER TO BE NOTIFIED ON ANY MODIFICATION.
6. A PILE BLOW COUNT LOG OF ALL PILES IS TO BE SUBMITTED TO THE ENGINEER OF RECORD. FAILURE TO SUBMIT SAID LOG WILL RELEASE THE ENGINEER OF ALL RESPONSIBILITY.
7. CONTRACTOR IS RESPONSIBLE FOR THE COMPARISON & VERIFICATION OF PILE LAYOUT DIMENSIONS WITH MOST RECENT ARCHITECTURAL DRAWINGS, ASSURING THAT PILES DO FALL WITHIN LIMITS OF THE DESIGN.
8. USE DROP HAMMER OR SINGLE ACTING AIR HAMMER DELIVERING 7,500 FT-LBS OF ENERGY PER BLOW. RAM WEIGHT OF DROP HAMMER SHALL NOT EXCEED 2,500 TO 3,000 LBS AND THE DROP SHOULD NOT EXCEED 3 FT., AT MINIMUM OF 28 BLOWS PER FOOT. IF THE DROP EXCEEDS 3 FT., CONTACT ENGINEER FOR INSTRUCTIONS.
10. FIELD VERIFY DIMENSIONS AGAINST THE ARCHITECTURAL DRAWINGS

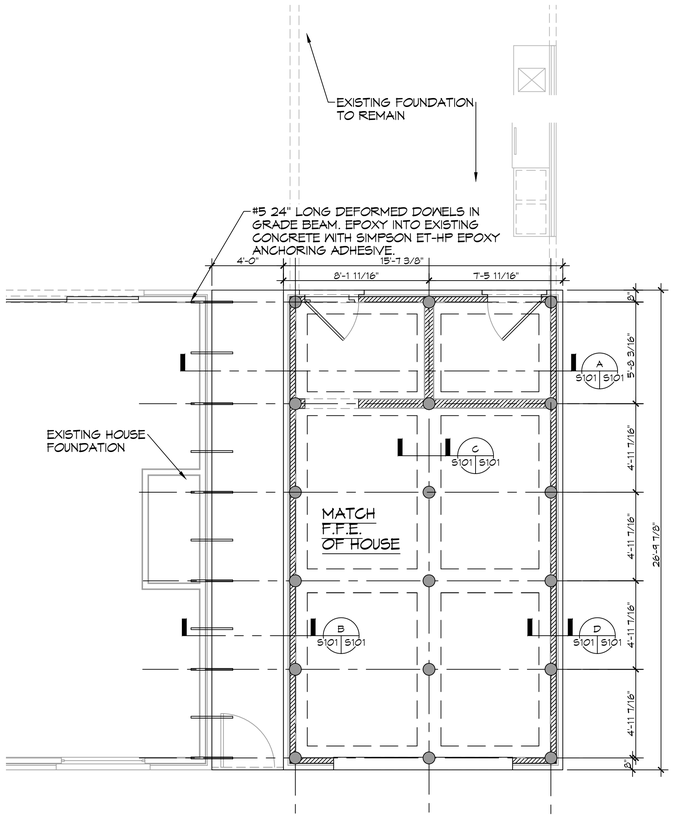

3 GARAGE FOUNDATION AND PILING PLAN
SCALE: 1/4"= 1'-0"

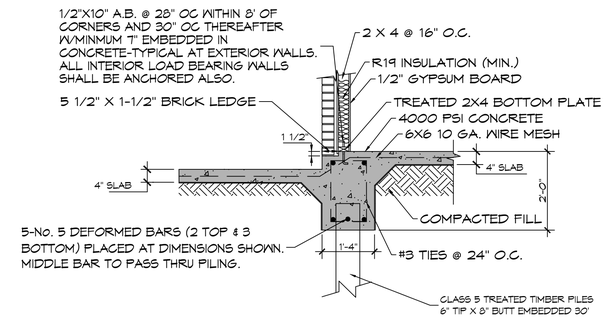

B S101 S101 EXTERIOR/WALKWAY GRADE BEAM
SCALE: N.T.S

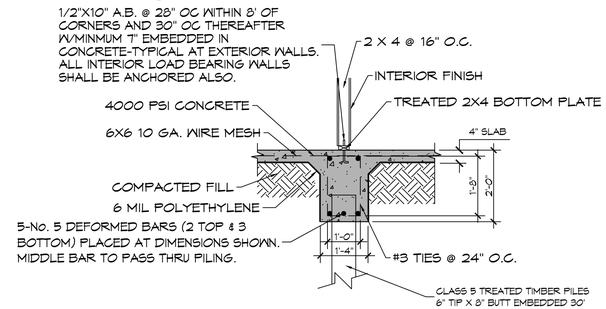

C S101 S101 INTERIOR GRADE BEAM
SCALE: N.T.S

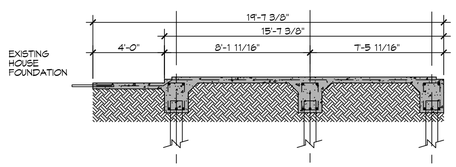

A S101 S101 FOUNDATION SECTION
SCALE: 1/4" = 1'-0"

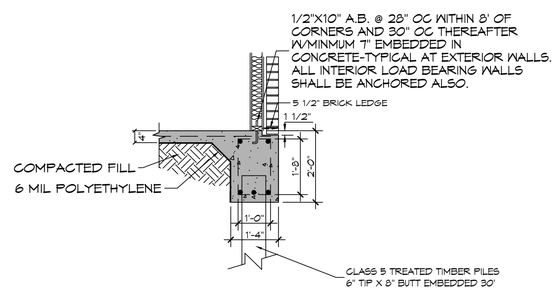

D S101 S101 BRICK EXTERIOR GRADE BEAM
SCALE: N.T.S

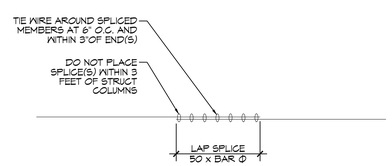

REBAR SPLICE
SCALE: 1/2" = 1' - 0"

DAMMON ENGINEERING, INC.
LOUISIANA & MISSISSIPPI
www.dammonengineering.com
info@dammonengineering.com
PH: 985.649.5832
Chief Engineer: Brian Mistich, PE
5454 Jean Lafitte Trail
Slidell, LA 70458

#	DESCRIPTION	DATE

REVISIONS

SEAL:

STATE OF LOUISIANA
BRIAN A. MISTICH
License No. 30187
PROFESSIONAL ENGINEER

HOUSE FRAMING PLAN

J I M I S M I T H

6356 PRATT DRIVE
NEW ORLEANS, LA 70122

DATE: 02-18-2025
JOB No:
CHECKED BY: BAM
DRAWN BY: GKD

These plans remain the property of Dammon Engineering, and are not to be reproduced, changed or copied in any form or manner whatsoever, nor are they to be assigned to any third party without first obtaining the expressed written consent and permission of Dammon Engineering. In the event of unauthorized reuse of these plans by a third party, the third party agrees to hold Dammon Engineering harmless for any damages resulting therefrom.

SHEET TITLE:
GARAGE FOUNDATION AND PILING PLAN AND DETAILS

DRAWING NUMBER:

S101

SHEET No: 1 of 4