SITE SPECIFIC NOTES:

1. AN LA LICENSED SURVEYOR SHALL PIN THE SOUTHERN RIGHT OF WAY (ROW) OF HWY 16 BETWEEN THE ACCESS RD FOR INTERSTATE I-55 AND PULESTON ROAD.
2. CONTRACTOR SHALL TRENCH OR HORIZONTALLY DIRECTIONAL DRILL (BORE) 6" HDPE FORCE MAIN ALONG THE SOUTHERN ROW FOR HWY 16 BETWEEN THE LIFT STATION NEAR THE ACCESS RD FOR INTERSTATE I-55 AND PULESTON ROAD. THE FORCE MAIN SHALL BE PLACED APPROXIMATELY ONE (1) FOOT WITHIN LA HWY 16 ROW AND SHALL BE A MINIMUM OF 3 FT BELOW GRADE.
3. CONTRACTOR SHALL UTILIZE METHODS IN ACCORDANCE WITH THE LATEST EDITION OF LA DOTD STANDARD SPECIFICATION FOR ROADS AND BRIDGES.

LEGEND

—FM—FM—	6" FORCE MAIN
—SS—	GRAVITY FED SEWER
	POWER POLE
	SANITARY SEWER MAN HOLE
X	EXISTING ELEVATION
STA=0+00' / EL=101.1'	STATION # / ELEVATION

ABBREVIATIONS

CMP = CORRUGATED METAL PIPE
EOR = EDGE OF ROAD
FM = FORCE MAIN
HWY 16 = LA STATE HIGHWAY 16
I-55 = INTERSTATE 55
RCP = ROUND CORRUGATED PIPE
RCPA = ROUND CORRUGATED PIPE-ARCH
ROW = RIGHT OF WAY

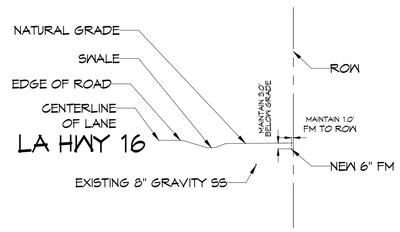

A M101A | M101A TYPICAL SECTION

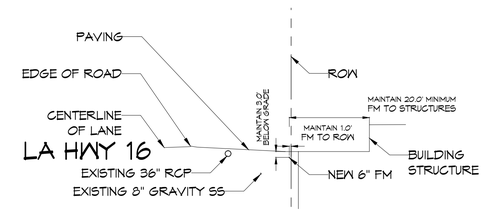

B M101A | M101A TYPICAL SECTION

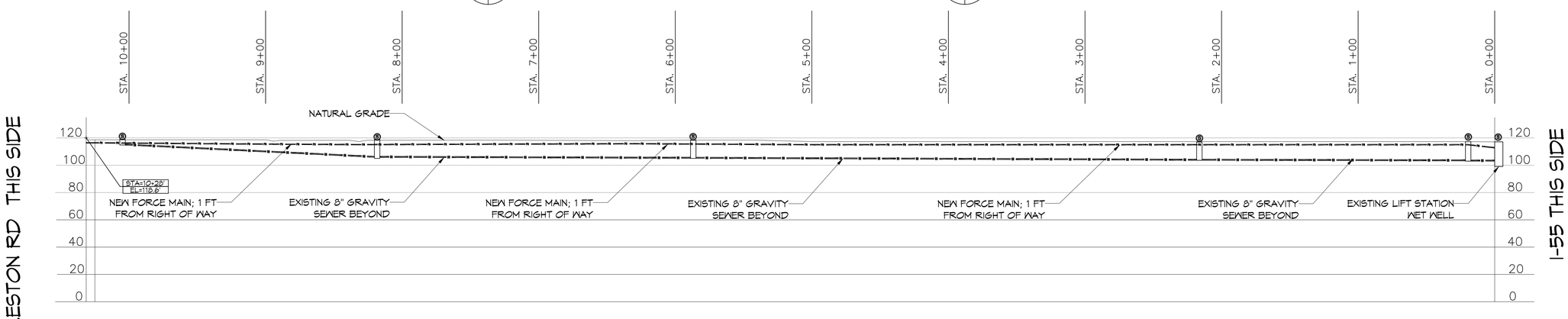

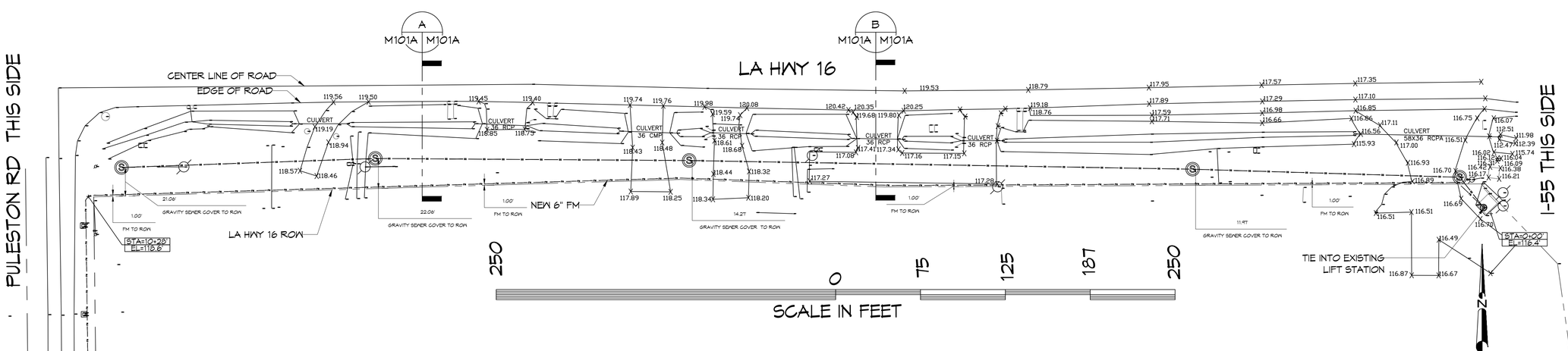

1 M101 | M101 FORCE MAIN PARTIAL SITE PLAN
1" = 40'

DAMMON ENGINEERING, INC.
LOUISIANA & MISSISSIPPI
www.dammonengineering.com
info@dammonengineering.com
PH: 985.649.5832
Chief Engineer: Brian Mistich, PE
554 Old Spanish Trail
Slidell, LA 70458

REVISIONS

#	DESCRIPTION	DATE

SEAL:

NEW FORCEMAIN
TANGIPAHOA PARISH LANDFILL
AMITE, LA

JOB No:	2490
DATE:	3-26-2024
DRAWN BY:	DPP
CHECKED BY:	BM

The client retains the property and other rights in this plan and, unless otherwise agreed in writing, may reproduce, use and distribute this plan for any purpose related to the project for which it was prepared. Reproducing, using or distributing this plan for any purpose other than the specific project for which it was prepared or making any changes to this plan without the written consent of Dammon Engineering, Inc. is prohibited and at the user's sole risk. © 2024 Dammon Engineering, Inc.

SHEET TITLE:
FORCE MAIN HWY 16

DRAWING NUMBER:
M101A

SHEET No: 2 of 6