NOTE: NAMING A CERTAIN BRAND, MAKE OR MANUFACTURER IS TO DESIGNATE THE GENERAL STYLE, TYPE, CHARACTER AND QUALITY STANDARD OF THE PRODUCT DESIRED. SUBSTITUTION REQUESTS MUST BE SUBMITTED PRIOR TO BIDDING.

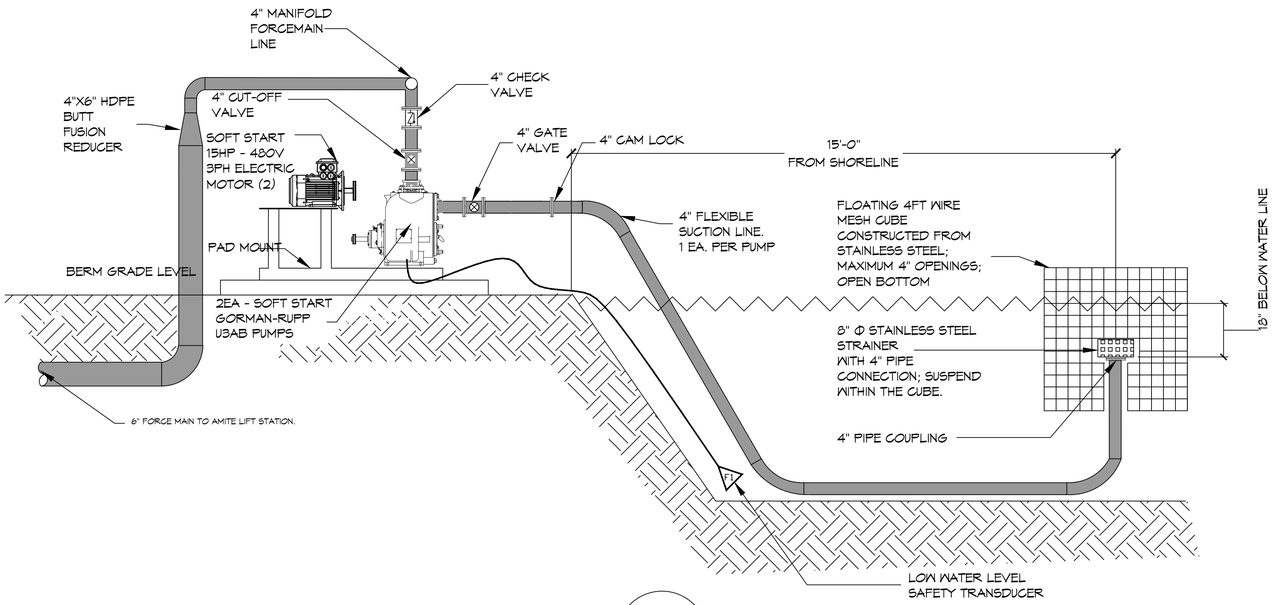

LIFT STATION DIAGRAM
N.T.S.
1 M102 | M102

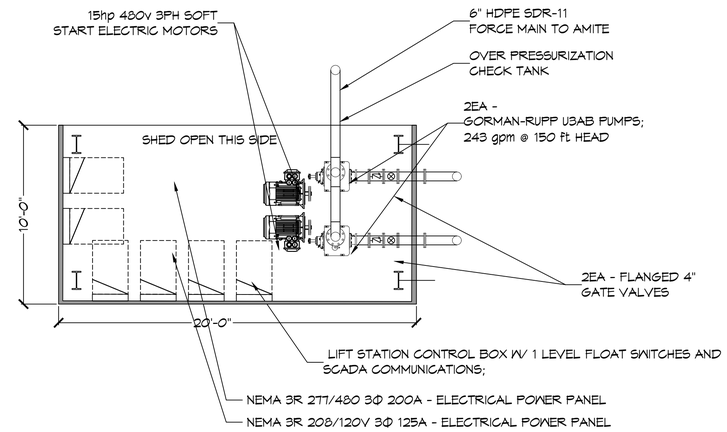

SHED LAYOUT
N.T.S.
2 M102 | M102

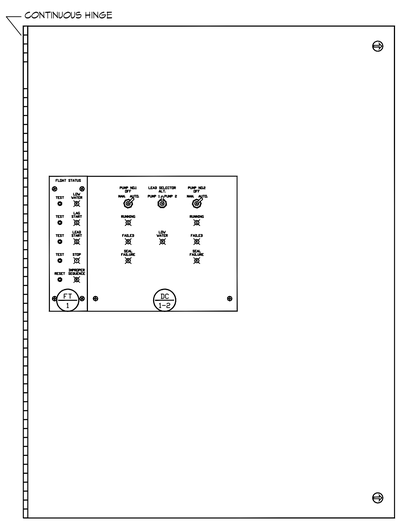

CONTROL PANEL
DEADFRONT DETAIL

LEGEND

LA LIGHTNING ARRESTOR -	SEE COMPONENT SPECIFICATIONS
PM PHASE MONITOR -	SEE COMPONENT SPECIFICATIONS
DC DUPLEX CONTROLLER -	SEE COMPONENT SPECIFICATIONS
FT FLOAT TEST -	SEE COMPONENT SPECIFICATIONS
AL ALARM LIGHT -	SEE COMPONENT SPECIFICATIONS
PW POWER LIGHT -	SEE COMPONENT SPECIFICATIONS

LIFT STATION CONTROL PANEL
ENCLOSURE DETAIL

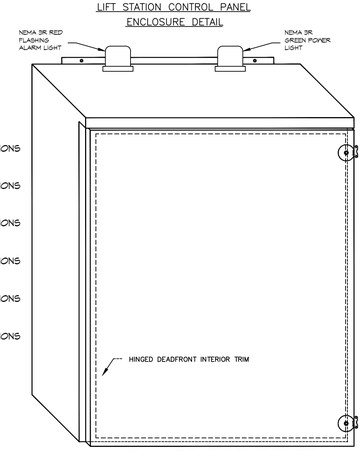

NEMA 3R ENCLOSURE
(24"H x 24"W x 8"D)
OR OTHER APPROVED PRE-DESIGNED
MANUFACTURE ENCLOSURE

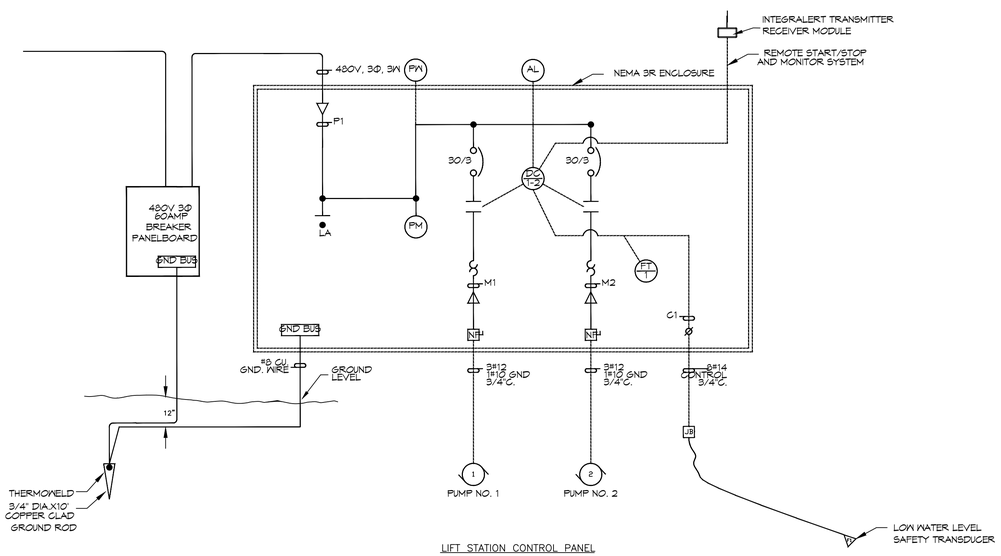

LIFT STATION CONTROL PANEL
ONE LINE POWER DIAGRAM AND
PROCESS AND INSTRUMENTATION DIAGRAM (P&ID)

DAMMON ENGINEERING, INC.
LOUISIANA & MISSISSIPPI
www.dammonengineering.com
info@dammonengineering.com
PH: 985.649.5832
Chief Engineer: Brian Mistich, PE
5540 Crawford Trail
Slidell, LA 70458

#	DESCRIPTION	DATE

REVISIONS

SEAL:

NEW FORCEMAIN
TANGIPAHOA PARISH LANDFILL
AMITE, LA

JOB No:	2490
DATE:	3-26-2024
DRAWN BY:	
CHECKED BY:	

THE INFORMATION CONTAINED HEREIN IS THE PROPERTY OF DAMMON ENGINEERING, INC. AND MAY NOT BE REPRODUCED OR USED FOR OTHER PROJECTS WITHOUT THE EXPRESSED WRITTEN CONSENT OF DAMMON ENGINEERING, INC. THESE DRAWINGS ARE THE PROPERTY OF DAMMON ENGINEERING, INC. AND ARE NOT TO BE USED FOR ANY OTHER PROJECT, FOR WHICH THEY WERE NOT PREPARED AND EXPRESSLY CONTRACTED. ANY REUSE WITHOUT WRITTEN VERIFICATION OR ADAPTATION BY DAMMON ENGINEERING, INC. FOR THE SPECIFIED PROJECT, SHALL BE AT THE USER'S SOLE RISK AND WITHOUT LIABILITY OR LEGAL EXPOSURE TO DAMMON ENGINEERING, INC.

SHEET TITLE:
LIFT STATION DETAILS @ OXIDATION POND

DRAWING NUMBER:
M102

SHEET No: 3 of 6