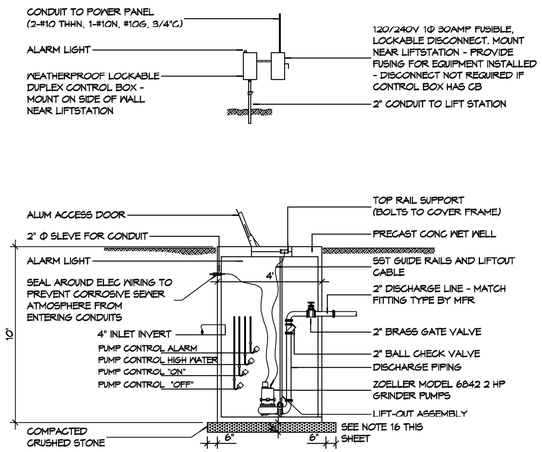

5 DETAIL
SCALE: NTS
LIFT STATION

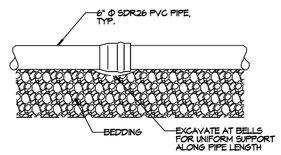

4 DETAIL
SCALE: NTS
SERVICE LATERAL DETAIL

NOTE: THE OIL/WATER SEPARATOR MUST HAVE A MINIMUM WATER DEPTH OF THREE (3) FEET AND A MINIMUM WATER VOLUME OF 750 GALLONS. IN ADDITION, THE TOP OF THE SEPARATORS BAFFLE WALL(S) MUST BE AT LEAST TWO INCHES BELOW THE TRAPS' WATER LEVEL. WATER MUST BE ABLE TO FREELY FLOW OVER THE ENTIRE WIDTH OF THE BAFFLE WALL. CAST IRON RING & COVER, EAST JORDAN V-1810-4 ASTM-A48 C-35 H-20/AASHTO M-306 4" BASE FLANGE REVERSIBLE RING WITH PLAIN COVER.

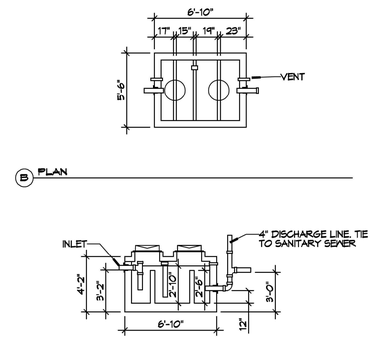

3 DETAIL
SCALE: NTS
OIL/WATER SEPERATOR

SITE LIGHTING

EXTERIOR LIGHTING SHALL BE SHADED OR INWARDLY DIRECTED IN SUCH A MANNER SO THAT NO DIRECT LIGHTING OR GLARE BE CAST BEYOND THE PROPERTY LINE. THE INTENSITY OF SUCH LIGHTING SHALL NOT EXCEED ONE FOOT CANDLE AS MEASURED AT THE ABUTTING PROPERTY LINE.

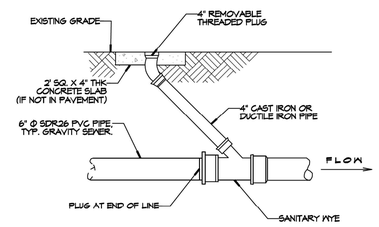

2 DETAIL
SCALE: NTS
THROUGH FLOW CLEAN OUT DETAIL

GENERAL SITE UTILITIES NOTES

1. ALL CONSTRUCTION SHALL COMPLY WITH CONTRACT SPECIFICATIONS AND APPLICABLE LOCAL, STATE, AND FEDERAL STANDARDS AND REGULATIONS.
2. CONSTRUCTION SHALL NOT INTERRUPT EXISTING UTILITIES.
3. ALL DISTURBED GROUND SHALL BE RESTORED IN KIND TO A CONDITION EQUAL TO OR BETTER THAN ORIGINALLY FOUND.
4. SOIL EROSION CONTROL SHALL BE IN ACCORDANCE WITH THESE DOCUMENTS.
5. PROTECT EXISTING UTILITY LINES FROM DAMAGE. FOLLOW INDIVIDUAL UTILITY'S RECOMMENDATIONS FOR UTILITY LINE PROTECTION.
6. CONTRACTOR SHALL IMMEDIATELY REPORT ALL DAMAGE TO UTILITY LINES TO BOTH UTILITY COMPANY AND ENGINEER.
7. ALL DAMAGE CAUSED TO EXISTING UTILITY LINES BY CONTRACTOR'S OPERATIONS SHALL BE REPAIRED BY THE CONTRACTOR TO COMPLETE SATISFACTION OF THE UTILITY COMPANY AND ENGINEER.
8. LOCATION OF EXISTING UTILITIES IS APPROXIMATE. CONTRACTOR SHALL FIELD VERIFY EXACT LOCATIONS.
9. CONTRACTOR IS RESPONSIBLE FOR CUT AND CAP OF EXISTING UTILITIES PRIOR TO ANY DEMOLITION.
10. CONTRACTOR SHALL CONTACT LOUISIANA ONE CALL PRIOR TO COMMENCEMENT OF SITE EXCAVATION.

SITE UTILITIES LEGEND

- EXISTING WATER LINE
- NEW WATER LINE
- EXISTING GAS LINE
- NEW GAS LINE
- EXISTING SEWER LINE
- NEW SEWER LINE
- NEW WASTE LINE

NOT USED
DIRECTION OF SLOPE
DIRECTION OF FLOW
CHECK VALVE (BACK FLOW PREVENTER)
LINE CLEAN OUT
CONNECTION TO EXIST
METER (WATER OR GAS)

3" SQUARE BRONZE POLE 101-4011-16-D1
LIGHT IAHP1A1UNFD830 BRONZE
T4TS2-SP/EXT-IAHP-UMP-001

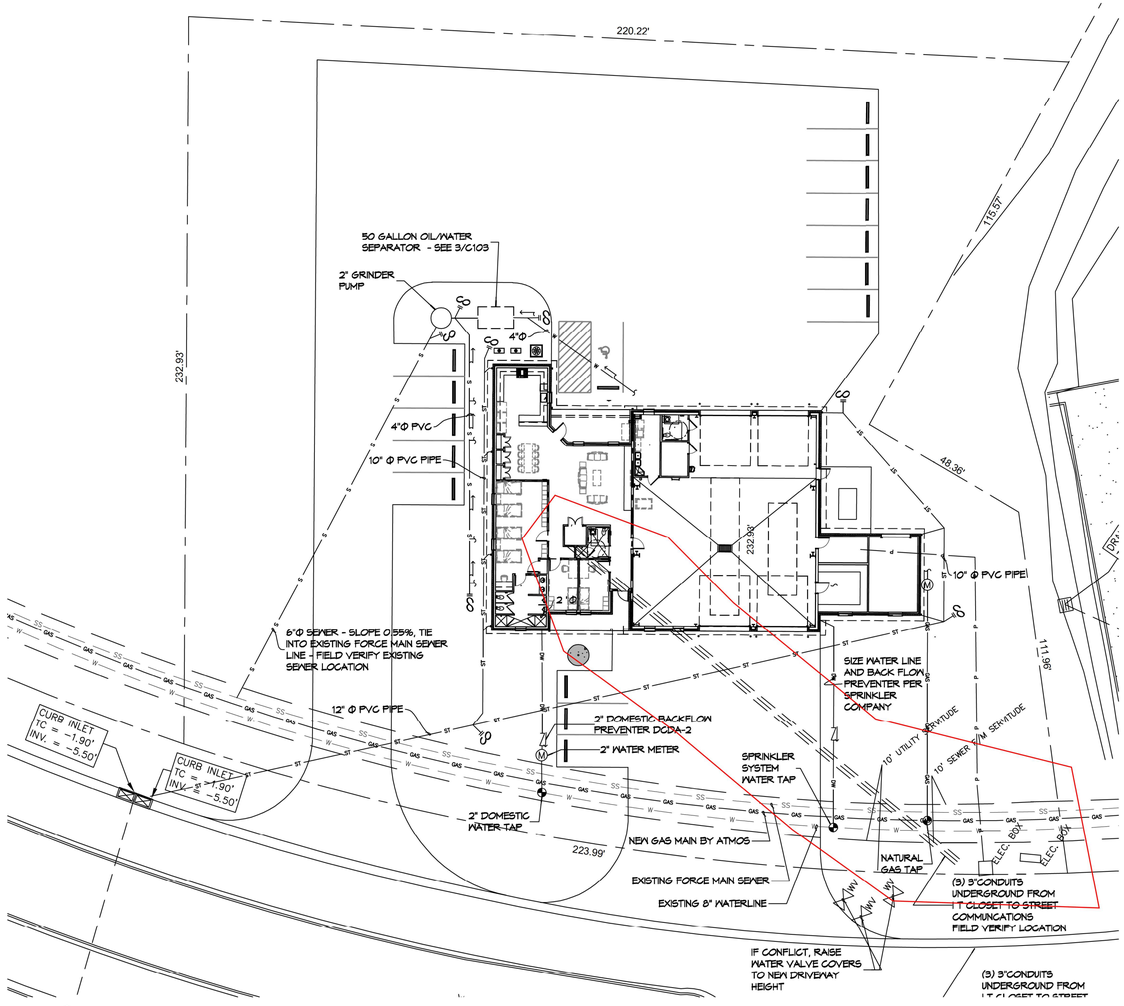

1 SITE UTILITIES PLAN
SCALE: 1" = 20'

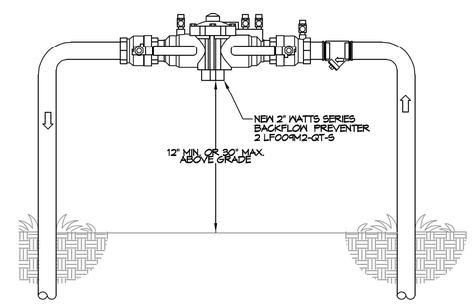

6 TYPICAL RISER DETAIL
SCALE: N.T.S.
TYPICAL

CONTACT FOR ATMOS ENERGY
Kathleen A Dufour
Account Representative
Atmos Energy Corporation
Louisiana Division
985-373-4177 Cell
kathleen.dufour@atmosenergy.com

CONTACT FOR MAGNOLIA WATER
Steve Ernst
Director, Louisiana Regulatory Relations
Email: sernst@csurgroup.com
M:(985) 640-1355

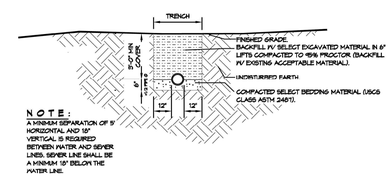

NOTE:
A MINIMUM SEPARATION OF 9' HORIZONTAL AND 18" VERTICAL IS REQUIRED BETWEEN WATER AND SEWER LINES. SEWER LINE SHALL BE A MINIMUM 18" BELOW THE WATER LINE.

7 DETAIL
SCALE: N.T.S.
SEWER AND WATER SEPERATION

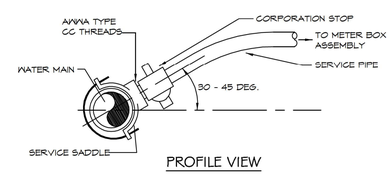

8 WATER SERVICE CONNECTION
SCALE: N.T.S.
TYPICAL

DAMMON ENGINEERING, INC.
LOUISIANA & MISSISSIPPI
www.dammonengineering.com
info@dammonengineering.com
PH: 985.649.5832
Chief Engineer: Brian Mistich, PE
5540 Cleveland Blvd
Slidell, LA 70458

#	DESCRIPTION	DATE

REVISIONS

SEAL:

NEW FIRE STATION #10
ST. TAMMANY FIRE PROTECTION DISTRICT NO. 1

LAKESHORE VISTA BLVD
SLIDELL, LA 70461

JOB No: 2025
DATE: 11-5-2025
DRAWN BY: DPD
CHECKED BY: KJK

THE ARCHITECTURAL WORK AS SHOWN, DESCRIBED AND DEPICTED IN THESE PLANS AND SPECIFICATIONS IS THE PROPERTY OF DAMMON ENGINEERING, INC. AND WAS PREPARED FOR USE ON THIS PROJECT. NO OTHER USE OR USE ON OTHER PROJECTS IS AUTHORIZED WITHOUT THE WRITTEN CONSENT OF DAMMON ENGINEERING, INC.

SHEET TITLE:
SITE PLAN - SITE UTILITIES AND DETAILS

DRAWING NUMBER:
C103

SHEET No: 7 of 35