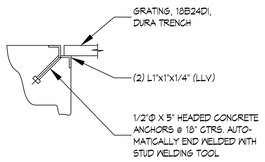

(B) TYPICAL GRATING SUPPORT

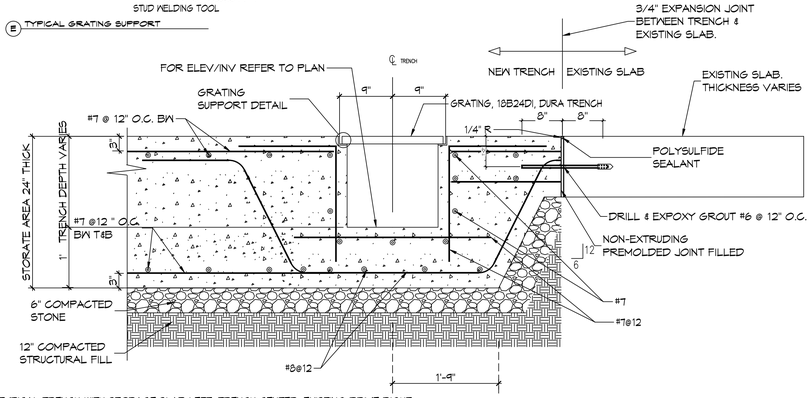

(D) TYPICAL TRENCH WITH STORAGE SLAB LEFT, TRENCH CENTER, EXISTING DRIVE RIGHT

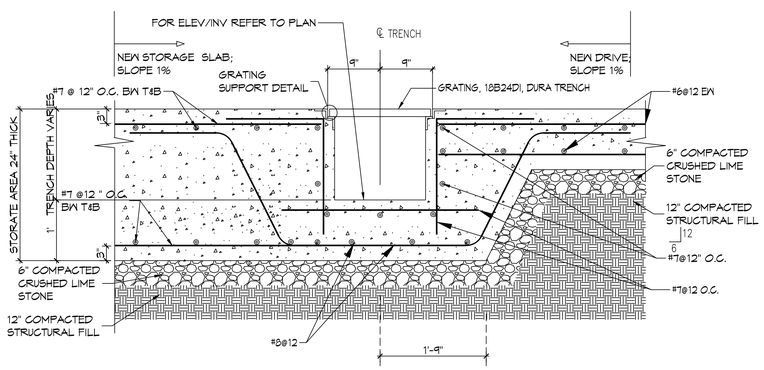

(C) TYPICAL TRENCH WITH STORAGE SLAB ON LEFT, TRENCH CENTER, NEW DRIVE ON RIGHT

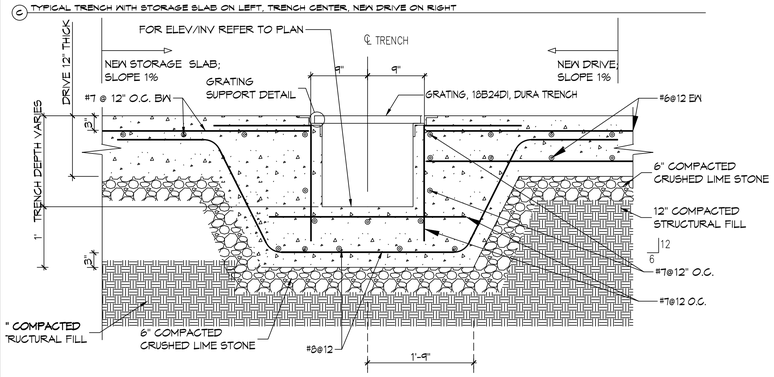

(B) TYPICAL TRENCH NEW CONCRETE DRIVE BOTH SIDES

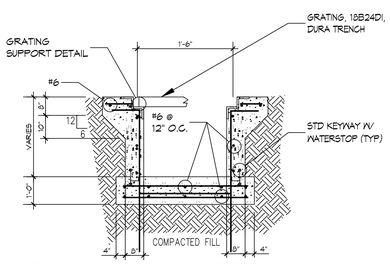

(A) TYPICAL TRENCH W/O CONCRETE PAVING EITHER SIDE

4 TRENCH DETAILS

SCALE: NTS

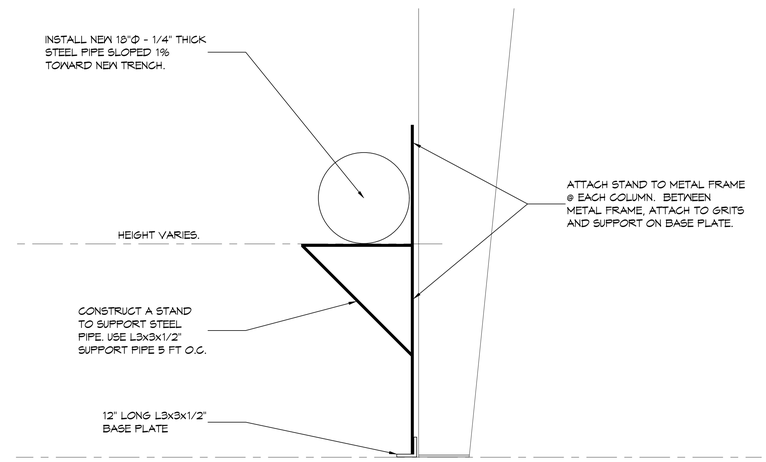

(B) TYPICAL STEEL PIPE STAND FOR RAINWATER RUNOFF

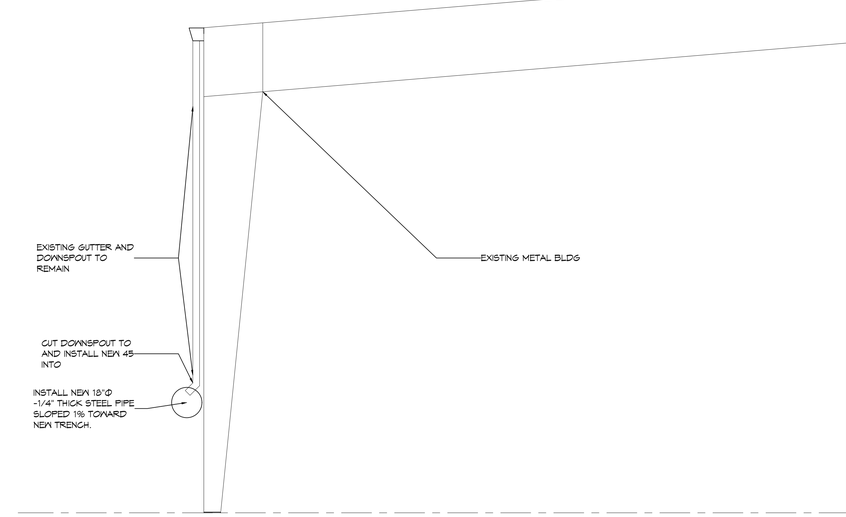

(A) TYPICAL STEEL PIPE FOR RAINWATER RUNOFF

5 DETAILS RAINWATER DOWNSPOUT TROUGH

SCALE: NTS

DAMMON ENGINEERING, INC.
554 Old Spanish Trail Slidell, LA 70458 (985) 649-2832
www.dammonengineering.com
info@dammonengineering.com
PH: 985.649.2832
Chief Engineer: Brian Mistich, PE
1500 Gause Blvd.
Slidell, LA 70458

#	DESCRIPTION	DATE

REVISIONS

SEAL:

MATERIAL STORAGE YARD

JINDAL TUBULAR USA

13052 SEA PLANE RD.
BAY ST LOUIS, MS 39520

JOB No:	2510
DATE:	3/2/2025
DRAWN BY:	JP
CHECKED BY:	MBD

The design, information and data shown on this drawing is the property of Dammon Engineering, Inc. Any reproduction or distribution of this drawing, in whole or in part, without written consent of Dammon Engineering, Inc. is prohibited. Only those persons who have signed a Dammon Engineering, Inc. Confidentiality Agreement may view, use, or retain this drawing. Any persons who do not have signed a Dammon Engineering, Inc. Confidentiality Agreement must immediately return this drawing to Dammon Engineering, Inc.

SHEET TITLE:
PARTIAL SITE PLAN - EAST

DRAWING NUMBER:
C102

SHEET No: 1 of 1

FILE NAME: J:\- INDUSTRIAL SITES\2510 - Jindal Tubular - Material Storage Site\dwg\Current\C102 DETAILS.dwg PLOT DATE & TIME: Friday, September 26, 2025 11:05:27 AM