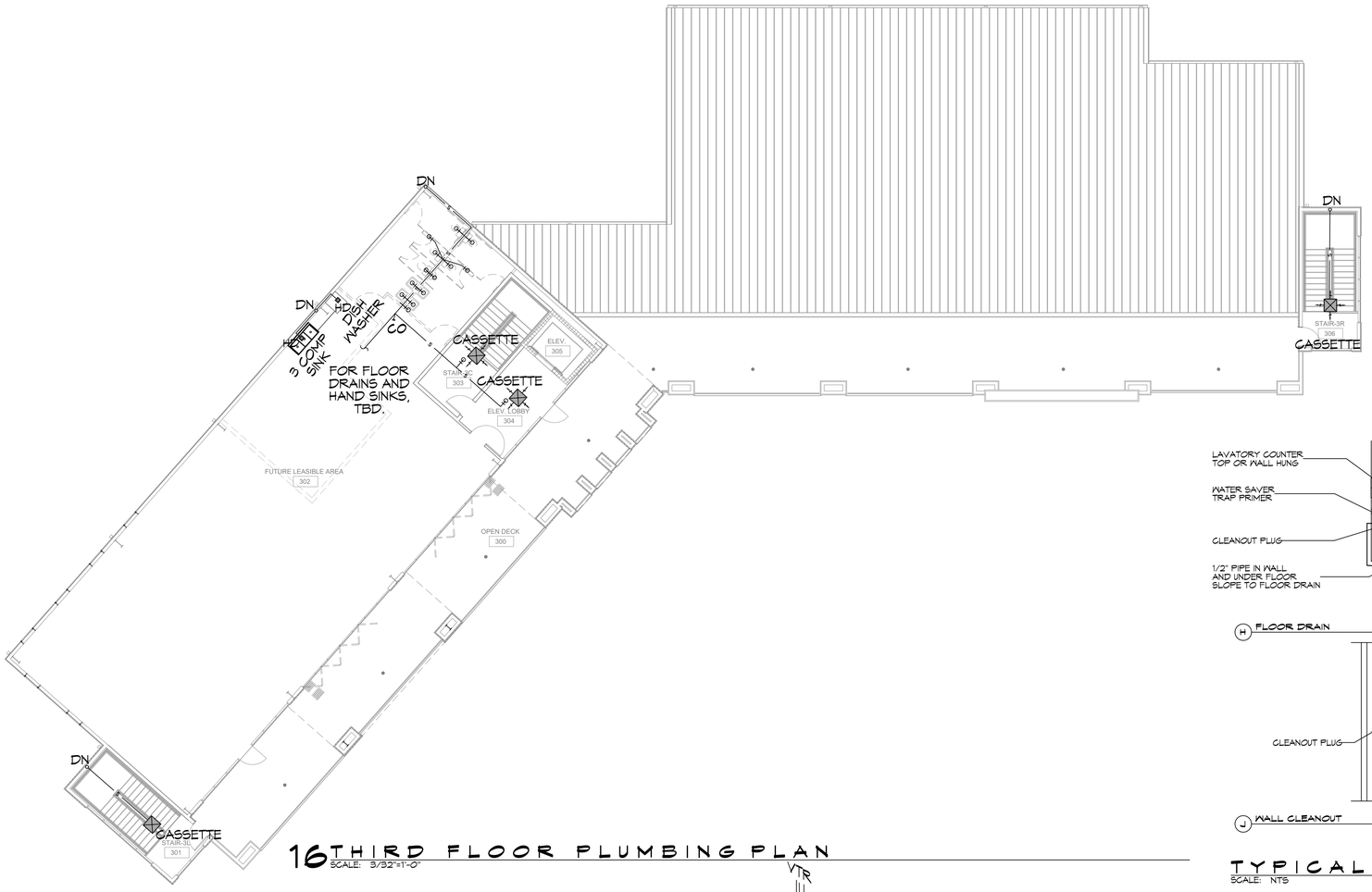

16 THIRD FLOOR PLUMBING PLAN
SCALE: 3/32"=1'-0"

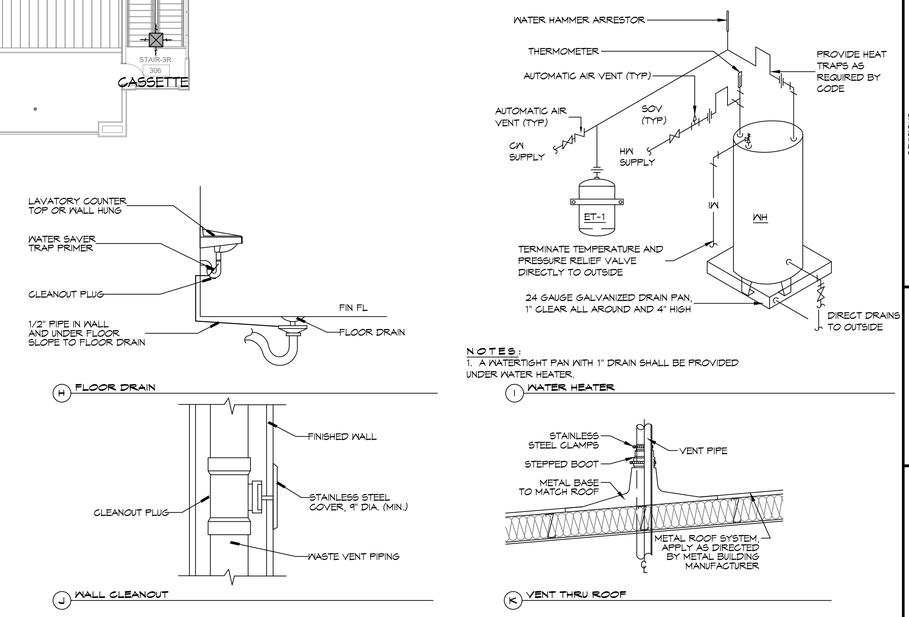

NOTES:
1. A WATERTIGHT PAN WITH 1" DRAIN SHALL BE PROVIDED UNDER WATER HEATER.

TYPICAL DETAILS
SCALE: NTS

MISCELLANEOUS PLUMBING

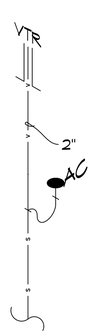

17 #3 L RISER
SCALE: N.T.S.

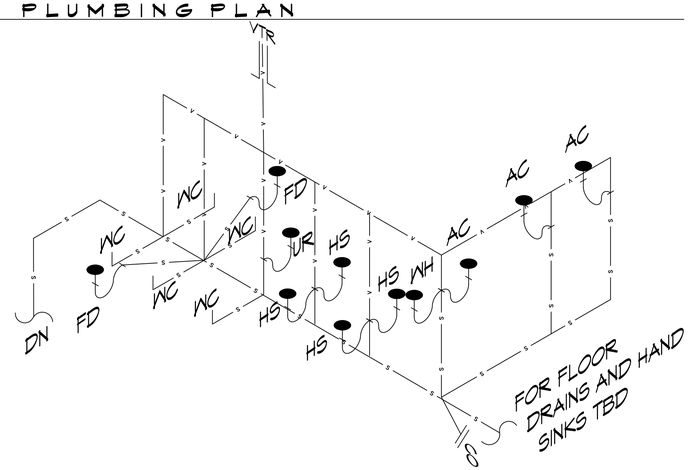

18 FUTURE AREA 302 RISER
SCALE: N.T.S.

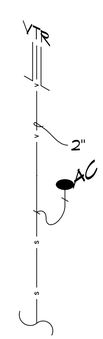

19 #3 R RISER
SCALE: N.T.S.

DAMMON ENGINEERING, INC.
LOUISIANA & MISSISSIPPI
Chief Engineer: Brian Mistich, PE
554 Old Spanish Trail
Slidell, LA 70458
www.dammonengineering.com
info@dammonengineering.com
PH: 985.649.5832

#	DESCRIPTION	DATE

REVISIONS

SEAL:

MIXED USE DEVELOPMENT
1-10 SOUTH SERVICE ROAD
METAIRIE LOUISIANA

JOB No:
DRAWN BY: GKD
DATE: 01-16-2025
CHECKED BY: BAM

The drawing and specifications, shapes and arrangements represented thereby are and shall remain the property of Dammon Engineering, and no part thereof shall be used or reproduced without the express consent of Dammon Engineering. Copyright © 2024 Dammon Engineering. Reproduction and/or distribution of these drawings or specifications constitutes a violation of the Louisiana Revised Statutes Title 14 Section 37 and Title 17 Section 101 et seq.

SHEET TITLE:
THIRD FLOOR PLUMBING PLAN AND RISER DIAGRAM

DRAWING NUMBER:
P103

SHEET No: 3 of 15