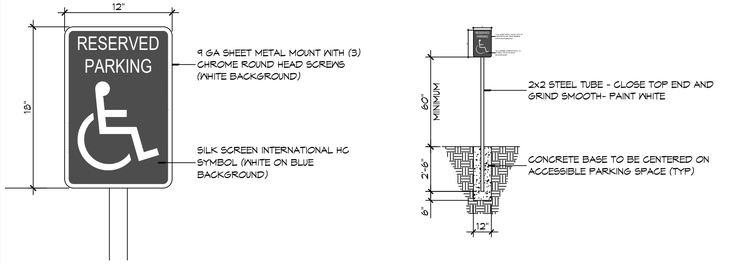

5 ACCESSIBLE SIGN
SCALE: NTS

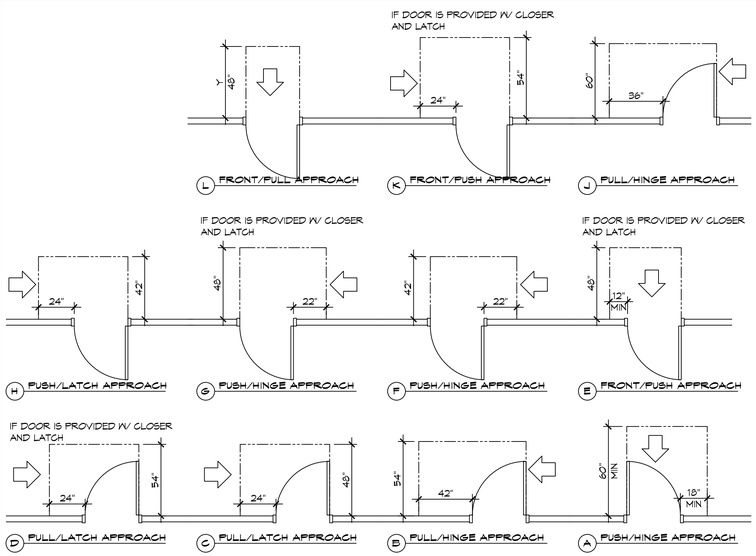

3 ADA DOOR CLEARANCES
SCALE: 1/4" = 1'-0"

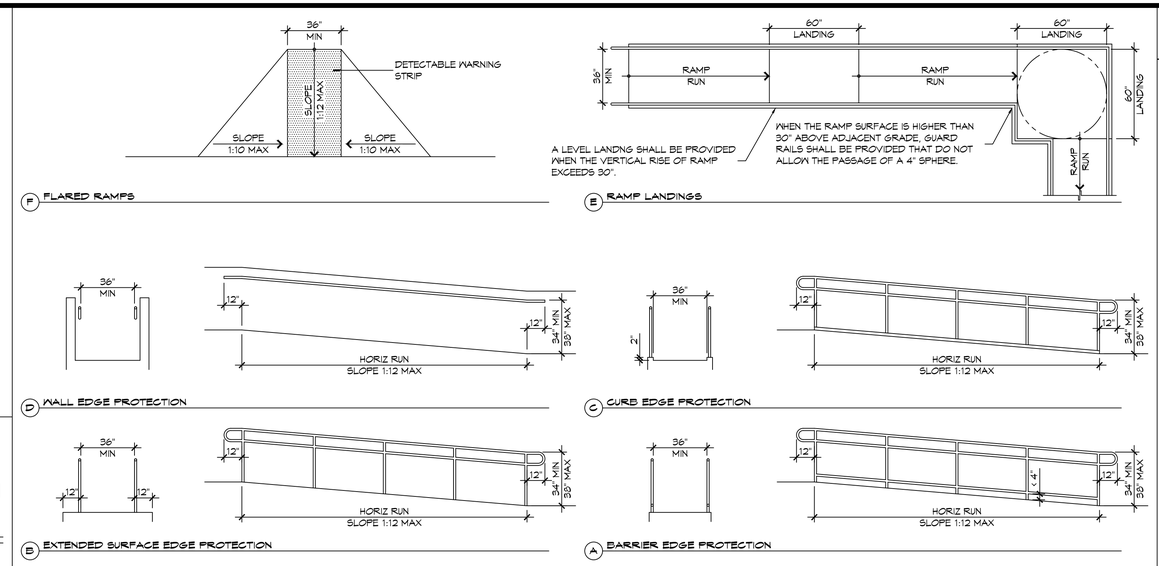

4 ACCESSABLE RAMPS
SCALE: 1/4" = 1'-0"

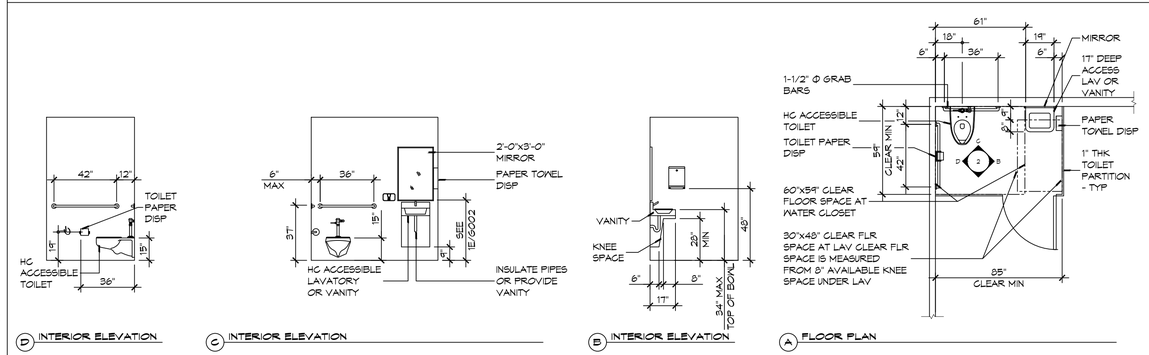

2 RESTROOM CLEARANCES
SCALE: 1/4" = 1'-0"

ACCESSIBILITY NOTES

DOOR CLEARANCE NOTES

ALCOVES SHALL COMPLY WITH THE CLEARANCES FOR FRONT APPROACHES. 31/G002 - 3K/G002.

DOOR HARDWARE SHALL BE LEVER TYPE.

MAX DOOR OPENING FORCE:
- INTERIOR HINGED DOORS: 5 LBF
- EXTERIOR HINGED DOORS: 8.5 LBF
- SLIDING OR FOLDING DOORS: 5 LBF
- FIRE DOORS SHALL HAVE THE MINIMUM OPENING FORCE ALLOWABLE BY THE APPROPRIATE ADMINISTRATIVE AUTHORITY.

HARDWARE REQUIRED FOR ACCESSIBLE DOOR PASSAGE SHALL BE MOUNTED NO HIGHER THAN 48" AND NOT LESS THAN 34" ABOVE FINISHED FLOOR.

THE FLOOR OR GROUND AREA WITHIN THE REQUIRED CLEARANCES SHALL BE LEVEL AND CLEAR.

THRESHOLDS AT DOORWAYS SHALL NOT EXCEED 3/4" IN HEIGHT FOR EXTERIOR SLIDING DOORS OR 1/2" FOR OTHER TYPES OF DOORS. RAISED THRESHOLDS AND FLOOR LEVEL CHANGES AT ACCESSIBLE DOORWAYS SHALL BE BEVELED WITH A SLOPE NO GREATER THAN 1:2.

DOORWAYS SHALL HAVE A MINIMUM CLEAR OPENING OF 32" WITH THE DOOR OPEN 90°, MEASURED BETWEEN THE FACE OF THE DOOR AND THE OPPOSITE STOP. OPENINGS MORE THAN 24" IN DEPTH SHALL MAINTAIN 32" MIN CLEARANCE.

RAMP NOTES

THE CLEAR SPACE BETWEEN THE HANDRAIL AND THE WALL SHALL BE MIN 1-1/2" CLEAR.

GRIPPING SURFACES SHALL BE CONTINUOUS AND UNOBSTRUCTED..

ENDS OF HANDRAILS SHALL BE EITHER ROUNDED OR RETURNED SMOOTHLY TO FLOOR, WALL, OR POST.

HANDRAILS SHALL NOT ROTATE WITHIN THEIR FITTINGS.

THE CROSS SLOPE OF RAMP SURFACES SHALL BE NO GREATER THAN 1:50.

OUTDOOR RAMPS AND THEIR APPROACHES SHALL BE DESIGNED SO THAT WATER WILL NOT ACCUMULATE ON WALKING SURFACES.

RAMPS AND LANDINGS WITH DROP-OFFS SHALL HAVE CURBS, WALLS, RAILINGS, OR PROJECTING SURFACES THAT PREVENT PEOPLE FROM SLIPPING OFF THE RAMP. CURBS SHALL BE A MINIMUM OF 2" HIGH.

HANDRAILS SHALL BE PROVIDED ALONG BOTH SIDES OF RAMP SEGMENTS. THE INSIDE HANDRAIL ON SWITCHBACK OR DOGLEG RAMPS SHALL ALWAYS BE CONTINUOUS.

RAMP LANDINGS SHALL BE AT LEAST AS WIDE AS THE RAMP RUN LEADING TO IT.

GENERAL SITE ACCESSIBILITY NOTES

1. ACCESSIBILITY SIGNAGE SHALL COMPLY WITH ADAAG 2010 GUIDELINES SECTION 703.7.
2. SEE SHEET FOR ACCESSIBLE RAMP AND HANDRAIL DESIGNS WHERE THEY OCCUR.
3. ALL ACCESSIBLE PARKING SPACES AND AISLES THAT SERVE THEM SHALL COMPLY WITH ADAAG 2010 GUIDELINES SECTIONS 502.4 AND 502.5.
4. OPENINGS IN GROUND SURFACES SHALL COMPLY WITH ADAAG 2010 GUIDELINES SECTION 302.3.
5. VERTICAL CHANGES IN ELEVATION ALONG ALL ACCESSIBLE ROUTES SHALL COMPLY WITH ADAAG 2010 GUIDELINES SECTIONS 303.2, 303.3, AND 303.4.
6. PARKING SPACES DESIGNATED AS ACCESSIBLE SHALL INCLUDE THE INTERNATIONAL SYMBOL OF ACCESSIBILITY COMPLYING WITH ADAAG 2010 GUIDELINES SECTIONS 703.7.2.1 AND 502.6.
7. ALL ACCESSIBLE PARKING SPACES AND ROUTES SERVING THEM SHALL HAVE A ROUGH, SLIP-RESISTANT SURFACE OR LIGHT BROOM FINISH IN COMPLIANCE WITH ADAAG 2010 GUIDELINES SECTION 302.1.

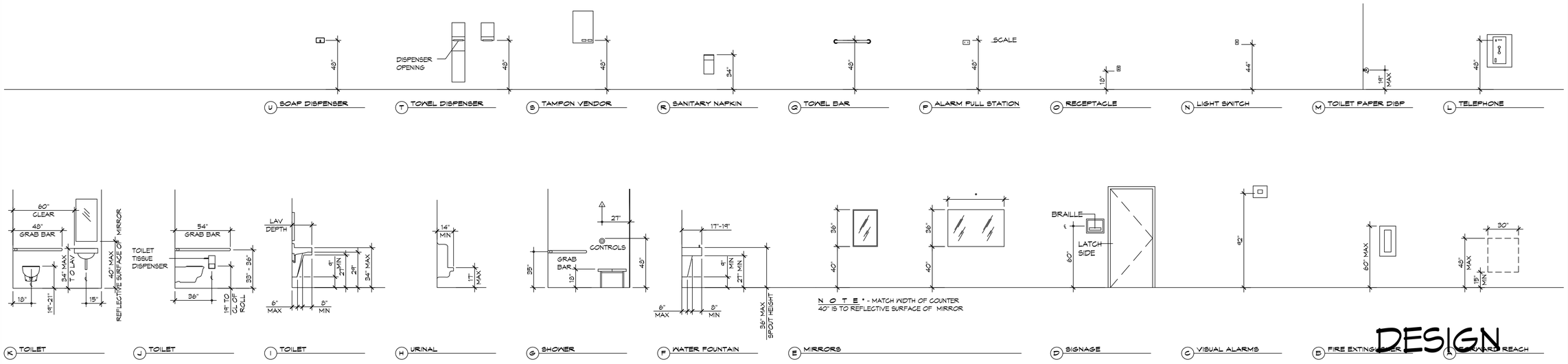

1 MOUNTING HEIGHTS
SCALE: 1/4" = 1'-0"

DESIGN EXCEPTION

DAMMON ENGINEERING, INC.
LOUISIANA & MISSISSIPPI
www.dammonengineering.com
info@dammonengineering.com
PH: 985.641.3934 F: 985.641.3936
Chief Engineer: Brian Mistich, PE
534 Old Spanish Trail
Slidell, LA 70458

#	DESCRIPTION	DATE

REVISIONS

STATE OF LOUISIANA
BRIAN A. MISTICH
License No. 30187
PROFESSIONAL ENGINEER

NEW AUDITORIUM
POPE JOHN PAUL II HIGH SCHOOL
1801 JAGUAR DR
SLIDELL, LA 70461

JOB No:	2522
DATE:	02-19-2026
DRAWN BY:	GCD
CHECKED BY:	JMS

No claim shall be made by any person, firm, or corporation based on the use of any part of these plans, specifications, or other documents for any purpose other than the project for which they have been prepared and for which they are intended. Any other use or reuse without written consent of the Engineer is prohibited and is at the risk of the user.

SHEET TITLE:
ACCESSIBILITY INFORMATION

DRAWING NUMBER:
G002

SHEET No: 2 of 17

FILE NAME: J:\1-Schools Projects\2522 - Pope John Paul II\Auditorium\Current Drawings\G002 - ADAAG Information.dwg PLOT DATE & TIME: Thursday, February 19, 2026 2:10:44 PM