KOHLER®
Roughing-In

K-15269
CORALAIS™
LAVATORY FAUCET

Ordering Information

Applicable product:	
Widespread lavatory faucet	K-15269

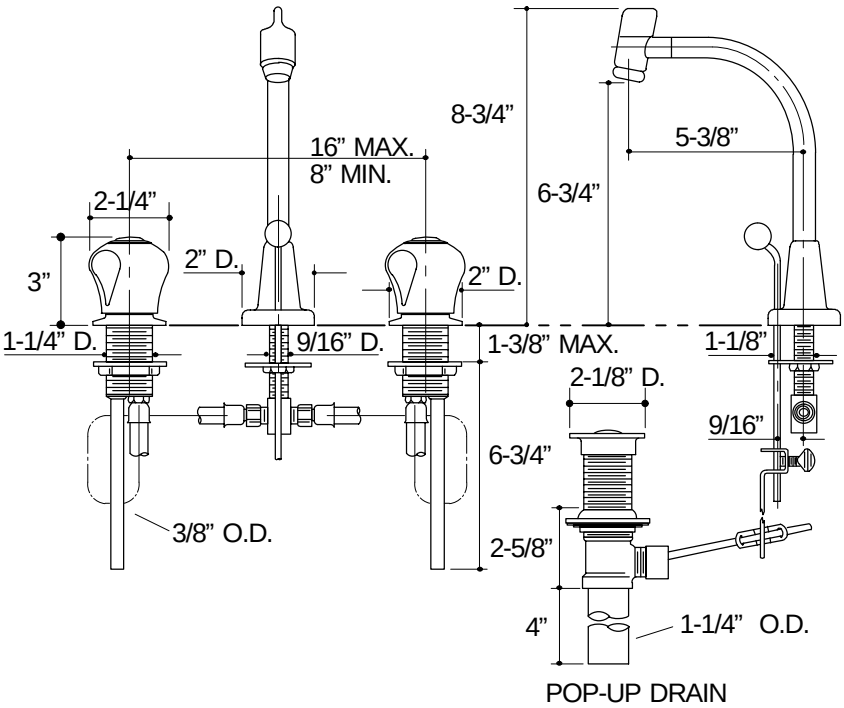

316

K-15269 Coralais™Lavatory Faucet
106188-1-**AA** (9619)

KOHLER®

NOTES: