KOHLER FAUCETS®

TRITON™ /FINESSE™

LAVATORY BASE FAUCET

K-7422-K

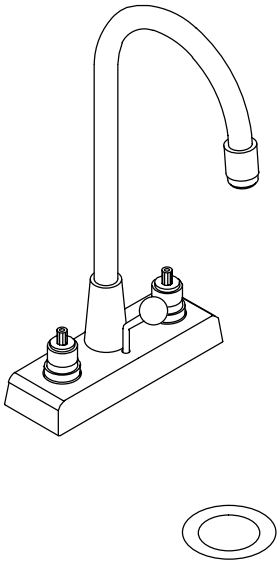

FEATURES

- *Brass construction*
- *For 4" centers*
- *Brass valve bodies*
- *Quarter-turn washerless ceramic disc valves*
- *5-1/4" gooseneck spout*
- *Available with standard or vandal-resistant Water-Guard® aerator*
- *2.0 gallons per minute*
- *Pop-up drain with lift rod and tailpiece*
- *Variety of handle style options*

CODES/STANDARDS APPLICABLE

Specified model meets or exceeds the following:

- *ASME/ANSI A112.18.1M*
- *Energy Policy Act of 1992*
- *NSF 61*

COLORS/FINISHES

- CP Polished Chrome
- PB Polished Brass

SPECIFIED MODEL: For complete faucet, both base faucet and handle choice must be specified.

Model	Description		
K-7422-K	With Standard Aerator	☐CP	☐PB
K-7422-KE	With Vandal-Resistant Aerator	☐CP	

Required Accessory (Includes Two Handles)			ADA	ADA	ADA	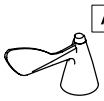 ADA	
K-16010-2	Triton Standard Handles	☐CP					
K-16010-3	Triton Cross Handles		☐CP				
K-16010-4	Triton Lever Handles			☐CP			
K-16010-5	Triton Wristblade Lever Handles				☐CP		
K-16050-5	Finesse Wrist Control Lever Handles					☐CP	☐PB

PRODUCT SPECIFICATION:

Two-handle centerset lavatory base faucet shall be of brass construction. Faucet shall feature brass valve bodies. Faucet shall feature quarter-turn washerless ceramic disc valves, assuring positive handle stop positioning. Product shall include 4" centers, 5-1/4" gooseneck spout, and pop-up drain with lift rod and tailpiece. Optional feature shall be standard or vandal-resistant Water-Guard aerator. Base faucet shall be Kohler Model K-7422-_____-_____ and handles shall be Kohler Model K-_____-_____-_____.

TRITON™ /FINESSE™

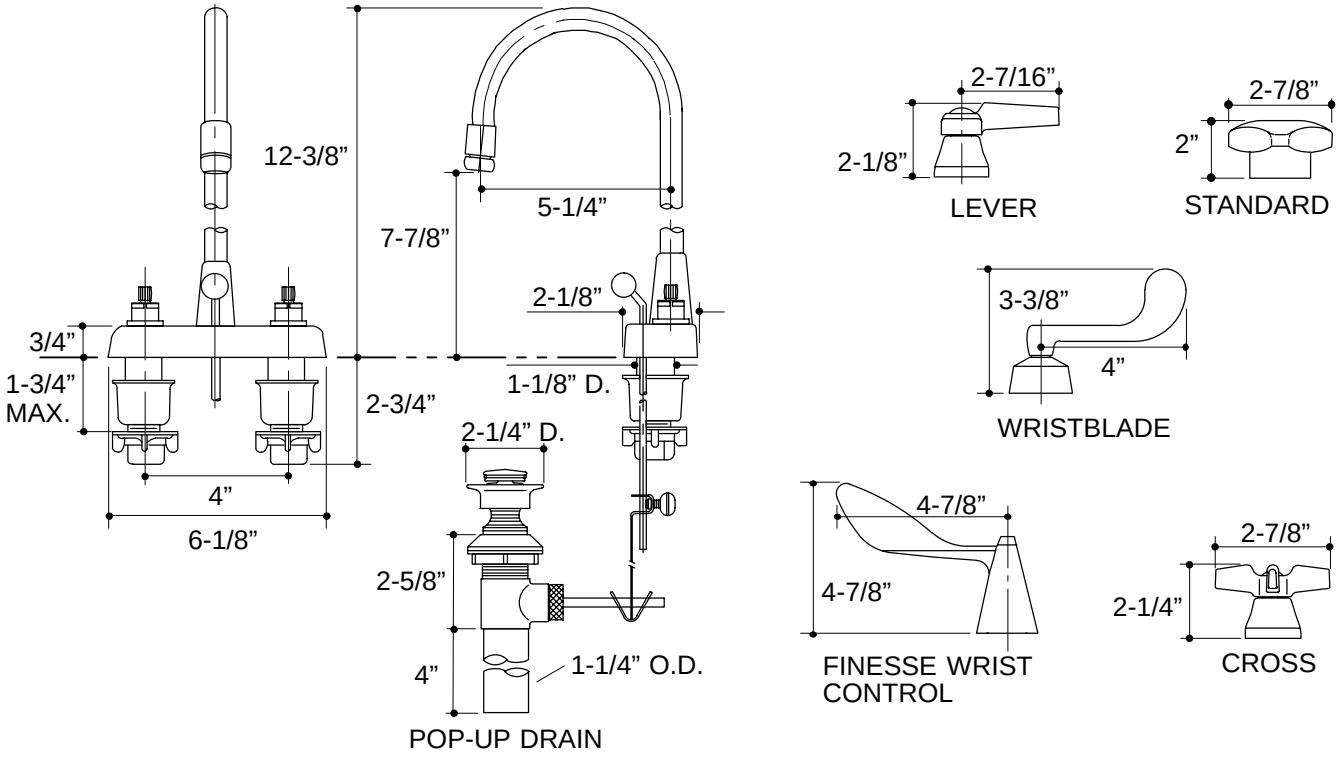

316

PRODUCT DIAGRAM

THE BOLD LOOK OF KOHLER®