KOHLER FAUCETS®

TRITON™ /FINESSE™

LAVATORY FAUCET
K-7437-K
ALSO K-7437-2A

FEATURES

- *Brass construction*
- *Flexible connections*
- *Brass valve bodies*
- *Quarter-turn washerless ceramic disc valves*
- *5” spout*
- *Available with standard or vandal-resistant Water-Guard® aerator*
- *2.0 gallons per minute*
- *Pop-up drain with lift rod and tailpiece*
- *Variety of handle style options*

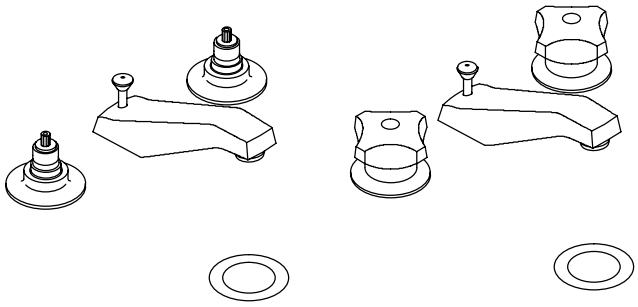

K-7437-K K-7437-2A

CODES/STANDARDS APPLICABLE

Specified model meets or exceeds the following:

- *ASME/ANSI A112.18.1M*
- *CSA B125*
- *Energy Policy Act of 1992*
- *IAPMO/UPC*
- *NSF 61*

COLORS/FINISHES

- CP Polished Chrome
- PB Polished Brass

SPECIFIED MODEL:

BASE FAUCET: For complete faucet, both base faucet and handle choice must be specified.

Model	Description		
K-7437-K	With Standard Aerator	☐CP	☐PB
K-7437-KE	With Vandal-Resistant Aerator	☐CP	

Required Accessory (Includes Two Handles)			ADA	ADA	ADA	ADA	
K-16012-2	Triton Standard Handles	☐CP					
K-16012-3	Triton Cross Handles		☐CP				
K-16012-4	Triton Lever Handles			☐CP			
K-16012-5	Triton Wristblade Lever Handles				☐CP		
K-16022-5	Finesse Wrist Control Lever Handles					☐CP	☐PB

COMPLETE FAUCET: Faucet handles included.

Model	Description	
K-7437-2A	With Standard Handles and Standard Aerator	☐CP

PRODUCT SPECIFICATION:

Two-handle widespread lavatory faucet shall be of brass construction. Faucet shall feature brass valve bodies. Faucet shall feature quarter-turn washerless ceramic disc valves, assuring positive handle stop positioning. Product shall include flexible connections, 5” spout, and pop-up drain with lift rod and tailpiece. Base faucet shall be Kohler Model K-7437-_____-_____ with K-_____-_____-CP handles **OR** complete faucet shall be Kohler Model K-7437-2A-CP.

TRITON™ /FINESSE™

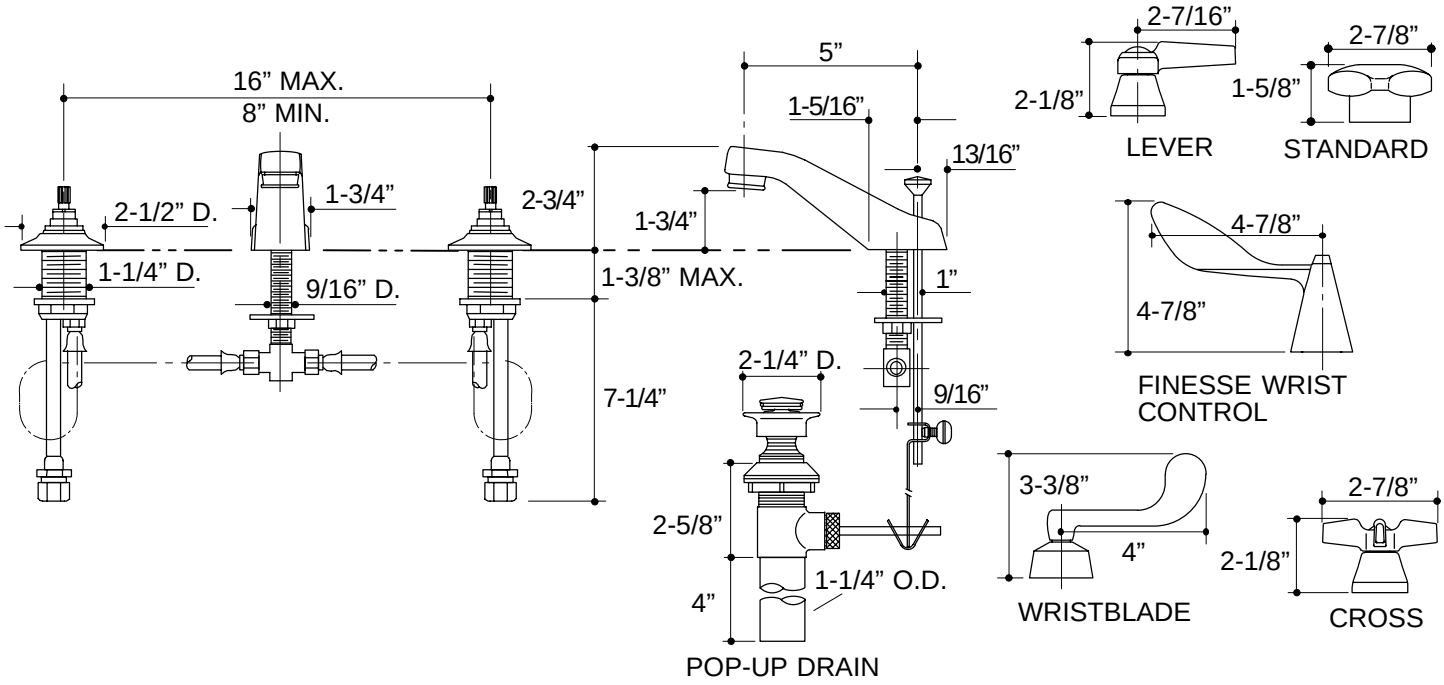

316

PRODUCT DIAGRAM