KOHLER FAUCETS®

TRITON™/FINESSE™

KITCHEN SINK BASE FAUCET

K-7765-K

ALSO K-7761-K

FEATURES

- *Brass construction*
- *For 8” centers*
- *Brass valve bodies*
- *Quarter-turn washerless ceramic disc valves*
- *8-1/8” swing spout*
- *2.2 gallons per minute*
- *Variety of handle style options*
- *Available with or without white handspray*

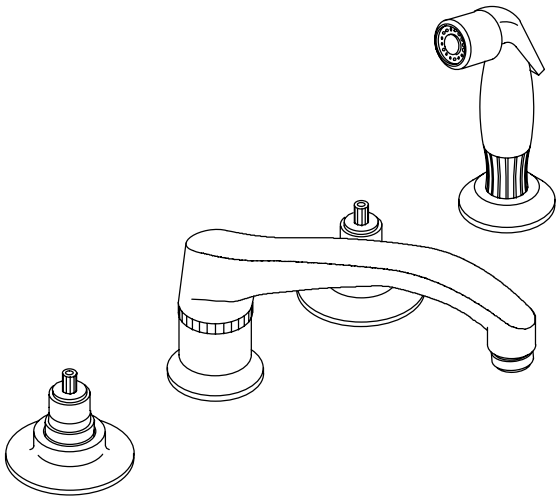

CODES/STANDARDS APPLICABLE

Specified model meets or exceeds the following:

- *ASME/ANSI A112.18.1M*
- *CSA B125*
- *Energy Policy Act of 1992*
- *IAPMO/UPC*
- *NSF 61*

COLORS/FINISHES

- CP Polished Chrome
- PB Polished Brass

SPECIFIED MODEL: For complete faucet, both base valve and faucet trim must be specified.

Model	Description		
K-7761-K	Less Handspray	☐CP	☐PB
K-7765-K	With Handspray	☐CP	☐PB

Required Accessory (Includes Two Handles)			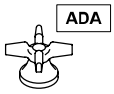 ADA	ADA	ADA	ADA	
K-16012-2	Triton Standard Handles	☐CP					
K-16012-3	Triton Cross Handles		☐CP				
K-16012-4	Triton Lever Handles			☐CP			
K-16012-5	Triton Wristblade Lever Handles				☐CP		
K-16022-5	Finesse Wrist Control Lever Handles					☐CP	☐PB

PRODUCT SPECIFICATION:

Two-handle kitchen sink base faucet shall be of brass construction. Faucet shall feature brass valve bodies. Faucet shall feature quarter-turn washerless ceramic disc valves, assuring positive handle stop positioning. Product shall include 8” centers, and 8-1/8” swing spout. Optional feature shall be with or without white handspray. Base faucet shall be Kohler Model K-_____-K-_____ and handles shall be Kohler Model K-_____-_____-_____.

TRITON™ /FINESSE™

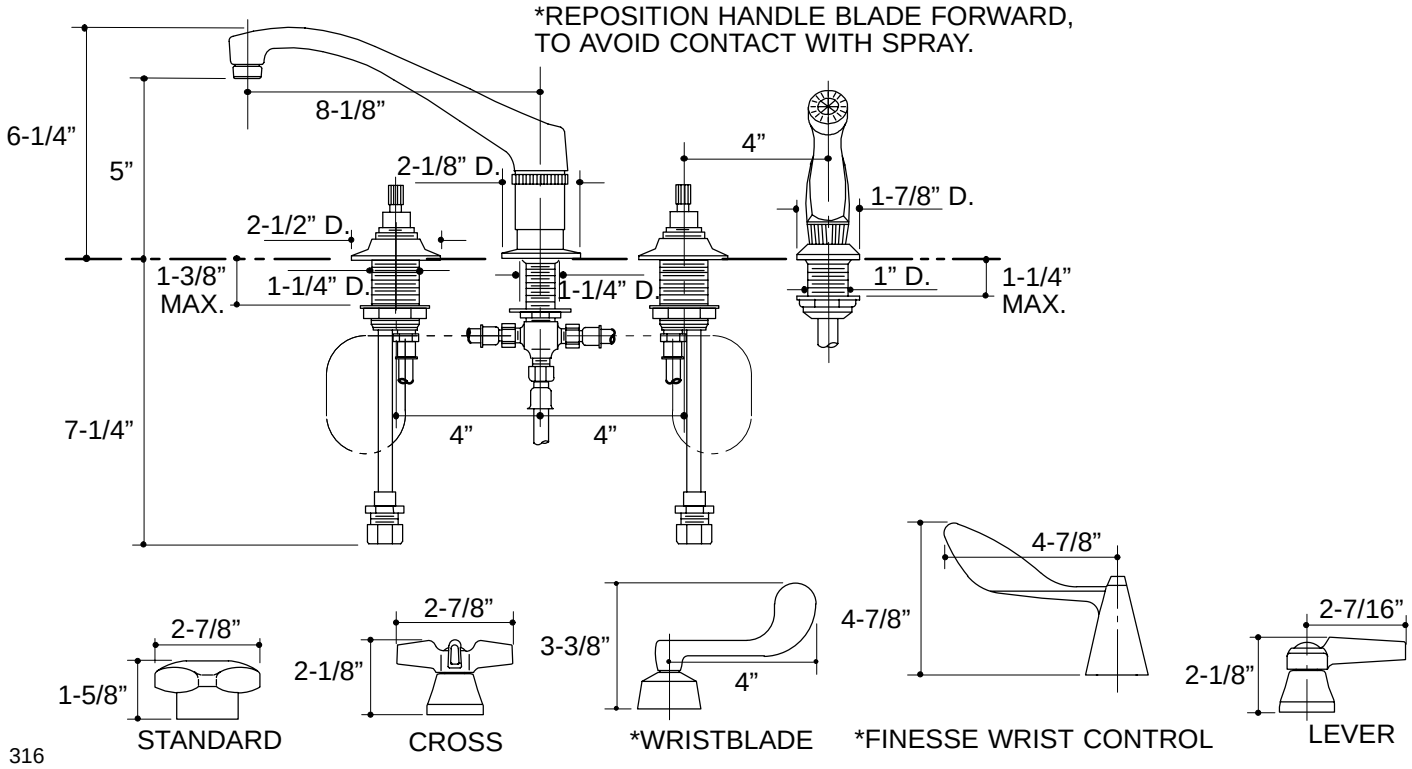

PRODUCT DIAGRAM

THE BOLD LOOK OF KOHLER®