KOHLER®
Roughing-In

K-14507
PROVENCE™
KITCHEN SINK FAUCET

Ordering Information

Applicable kitchen sink faucet:	
Cylinder handles	K-14507-7
Oval handles	K-14507-9

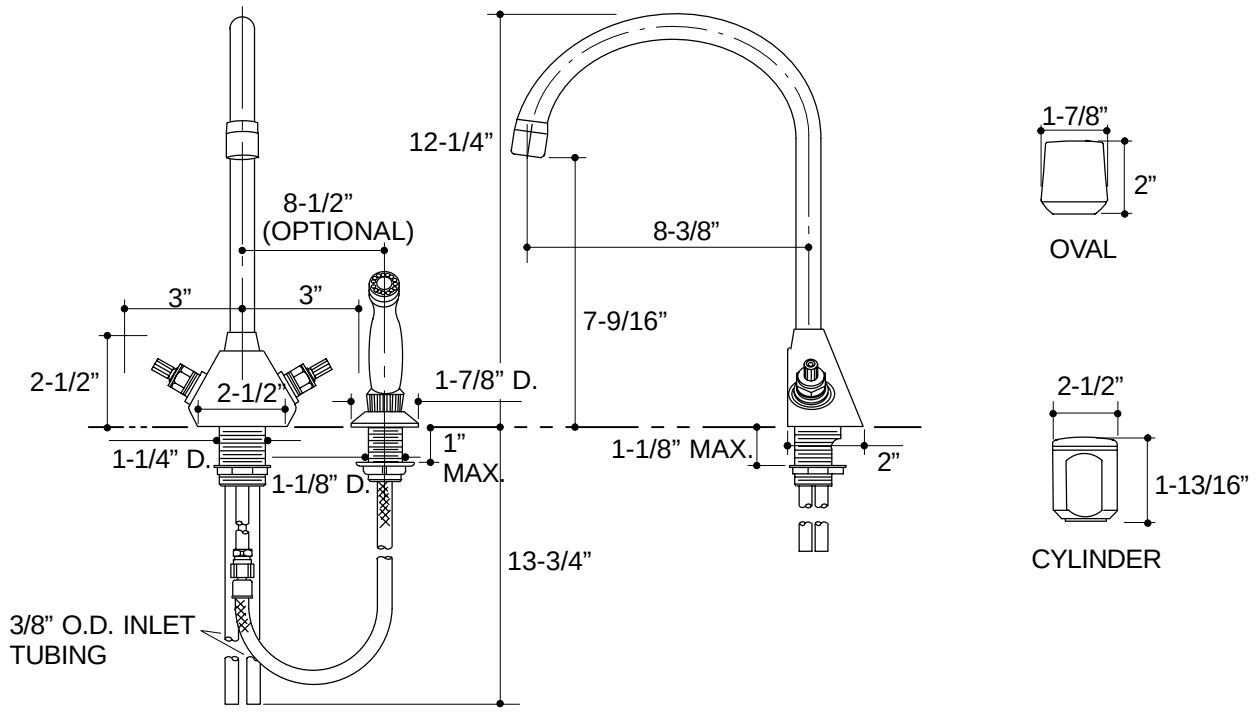

316

NOTES: