K-7923-8
SEAWALL
DECK-MOUNT BATH FAUCET WITH HANDSHOWER

Ordering Information

Applicable faucet:	
Cirrus™ handles	K-7923-8

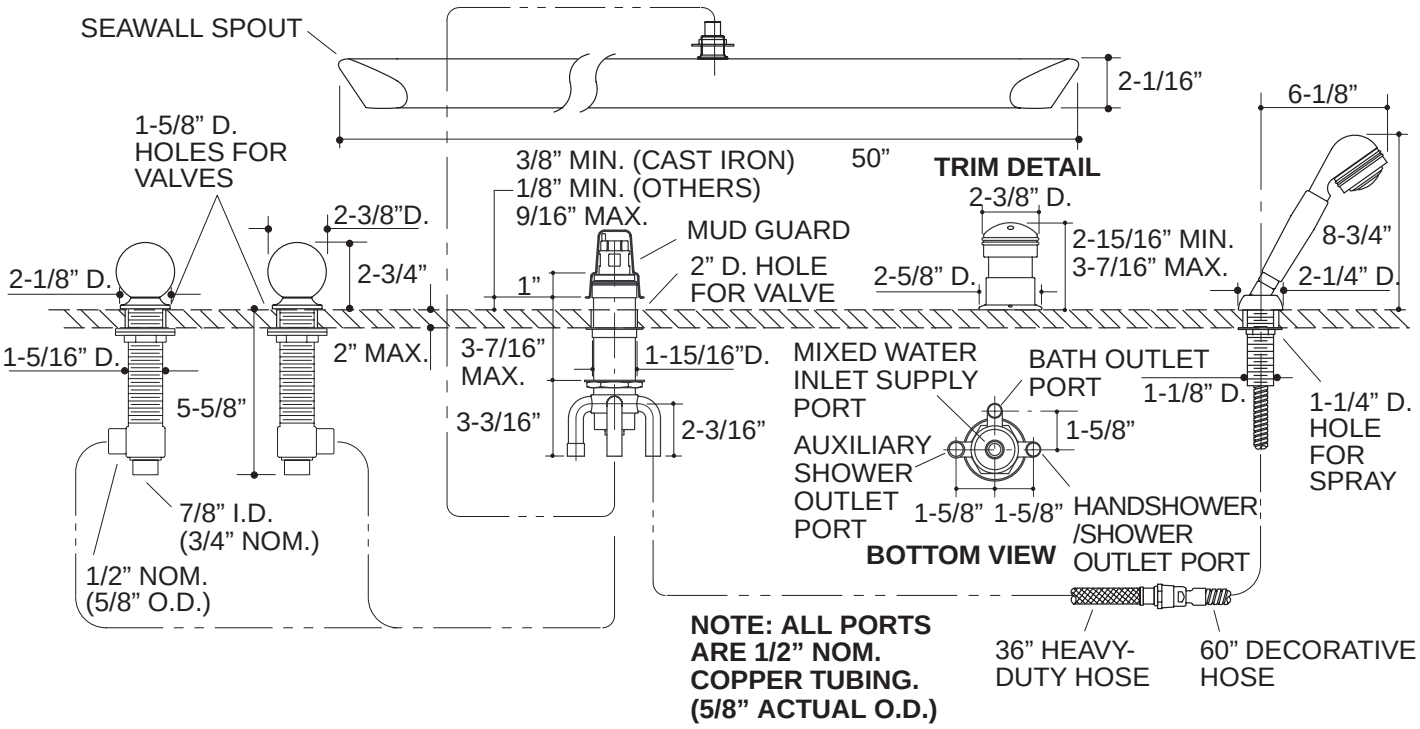

NOTES: