KOHLER®
Roughing-In

K-8202-K
TABORET®
CENTERSET LAVATORY FAUCET

Ordering Information

Applicable faucet:	
Base faucet without pop-up drain*	K-8202-K
Handles:	
Vandal resistant T	K-16070-6C
Vandal resistant lever	K-16070-4C
*Handles must be ordered to complete faucet.	
ADA Lever handles are ADA compliant	

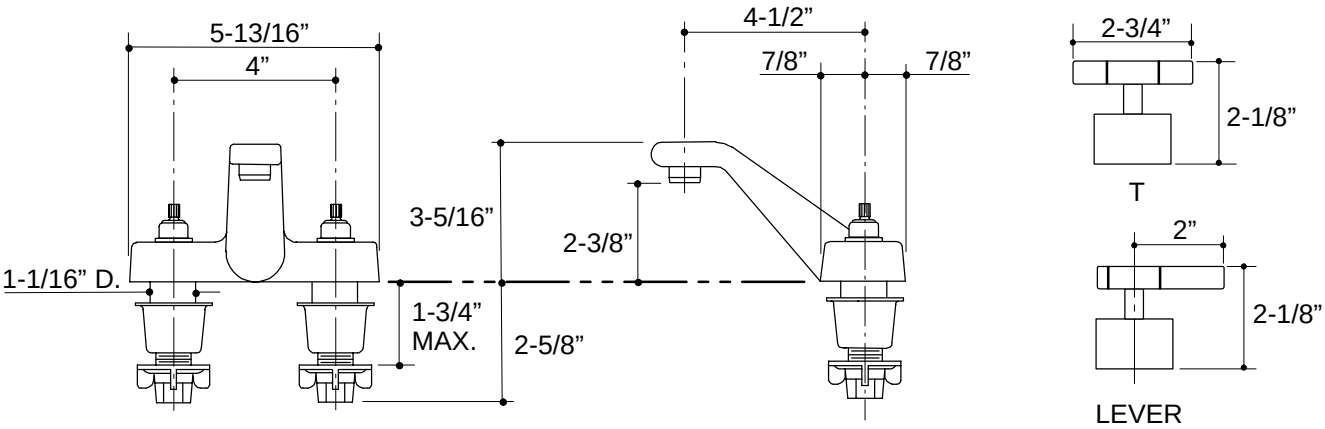

.9<14

NOTES: