KOHLER®
Roughing-In

K-377
FINIAL FUNDAMENTALS
KITCHEN SINK FAUCET

Ordering Information

Applicable faucet:	
With cross handles	K-377-3
ADA Cross handles are ADA compliant	

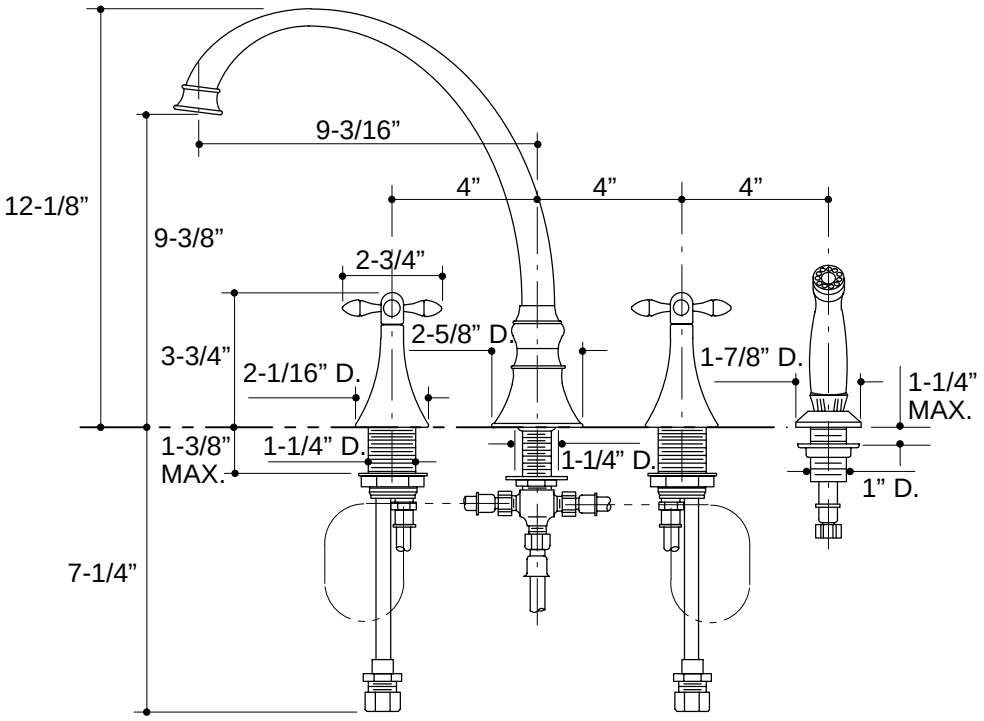

316

K-377 Finial Fundamentals Kitchen Sink Faucet
115909-1-**AA** (A)

KOHLER®

NOTES: