KOHLER®
SERVICE PARTS
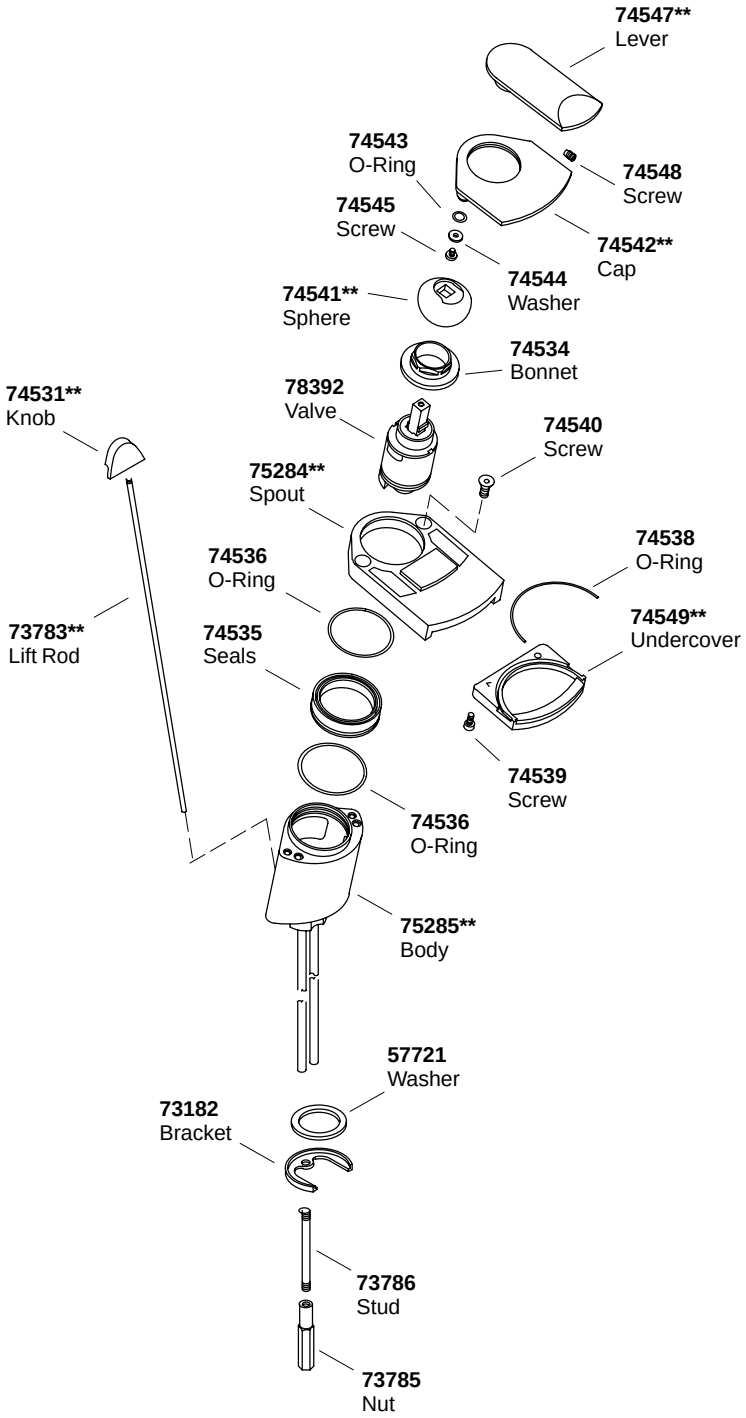
TROCADERO™
BIDET AND LAVATORY FAUCET