KOHLER® SERVICE PARTS

CORALAIS™ KITCHEN SWING SPOUTS

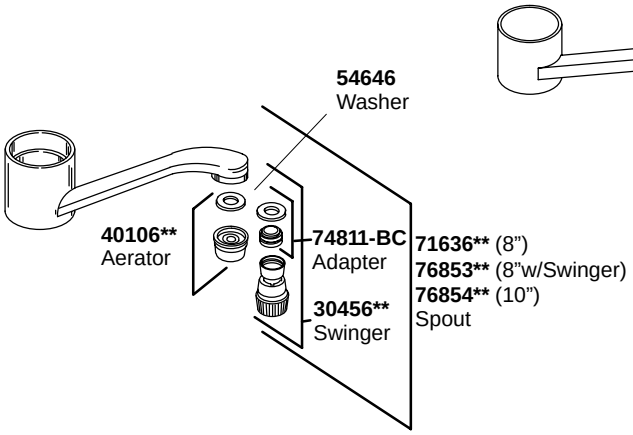

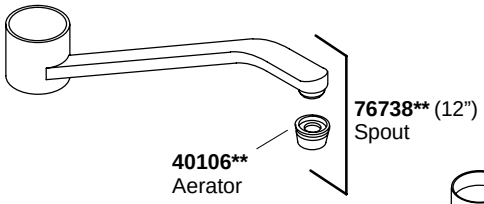

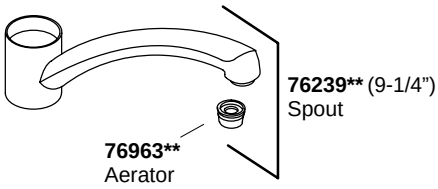

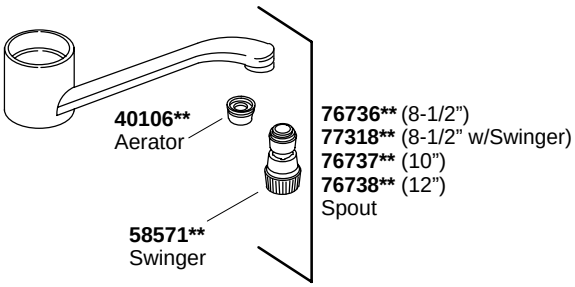

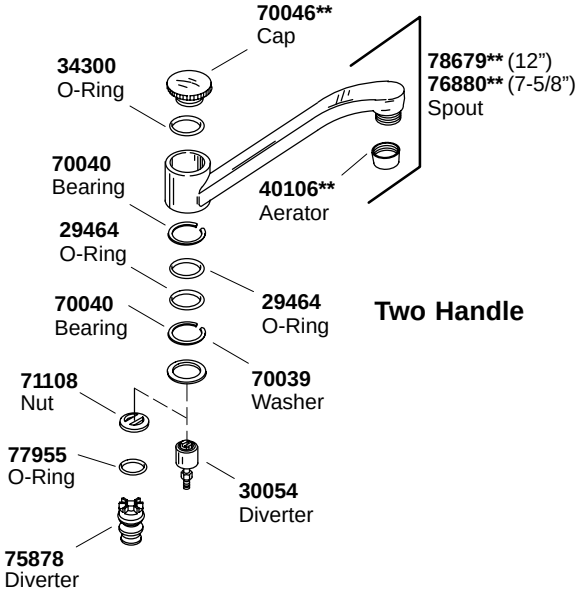

Two Handle

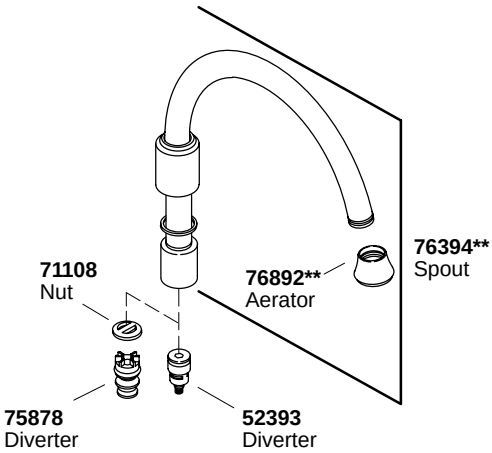

****Finish/color code must be specified when ordering.**