KOHLER®
SERVICE PARTS

SAN RAPHAEL™ POWER LITE™ TOILET

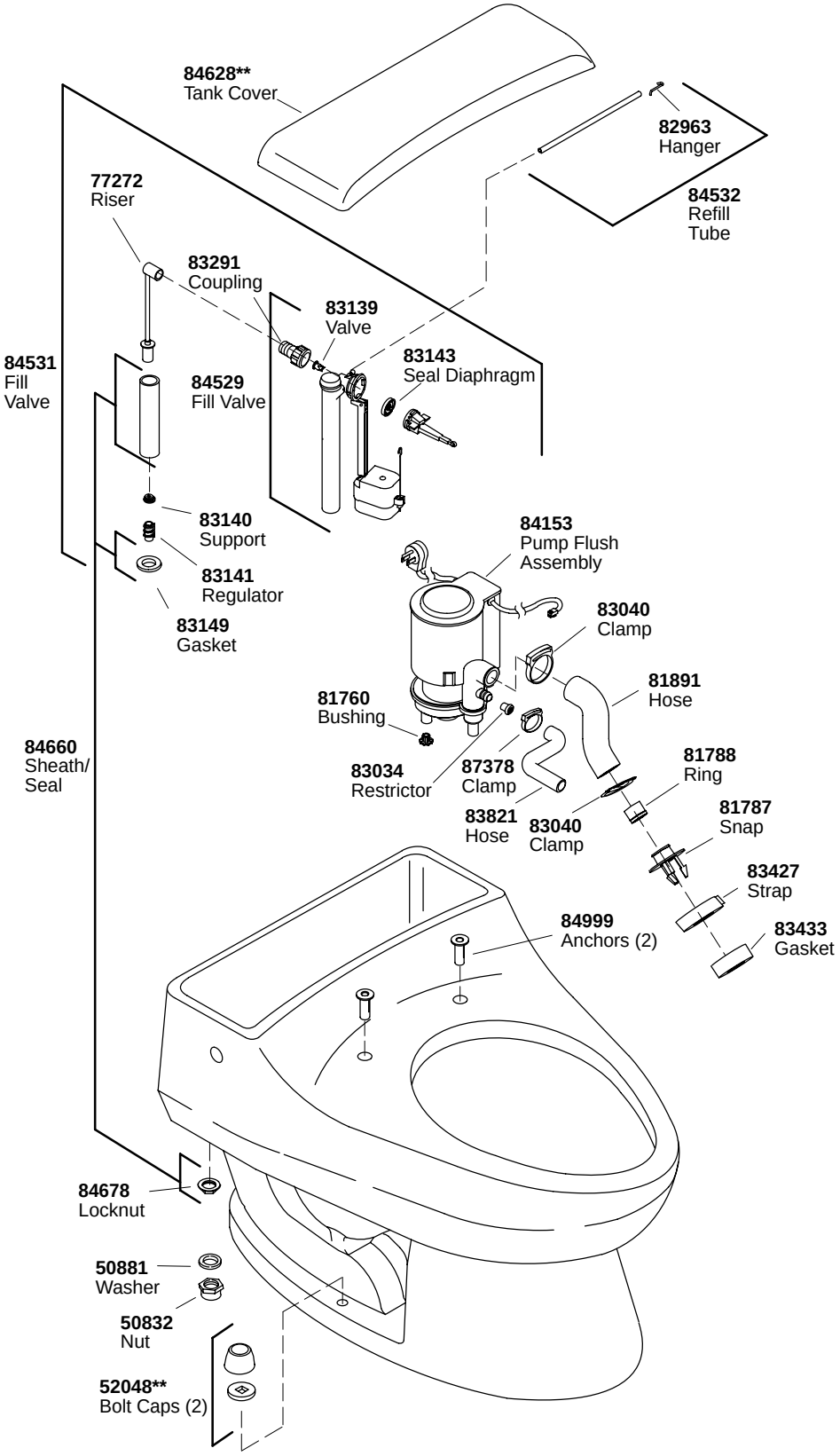

****Finish/color code must be specified when ordering.**