# KOHLER® SERVICE PARTS

## WELLWORTH™/HIGHLINE™ TOILETS

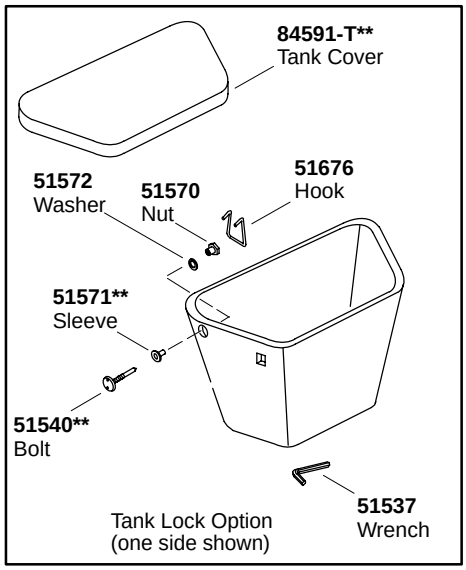


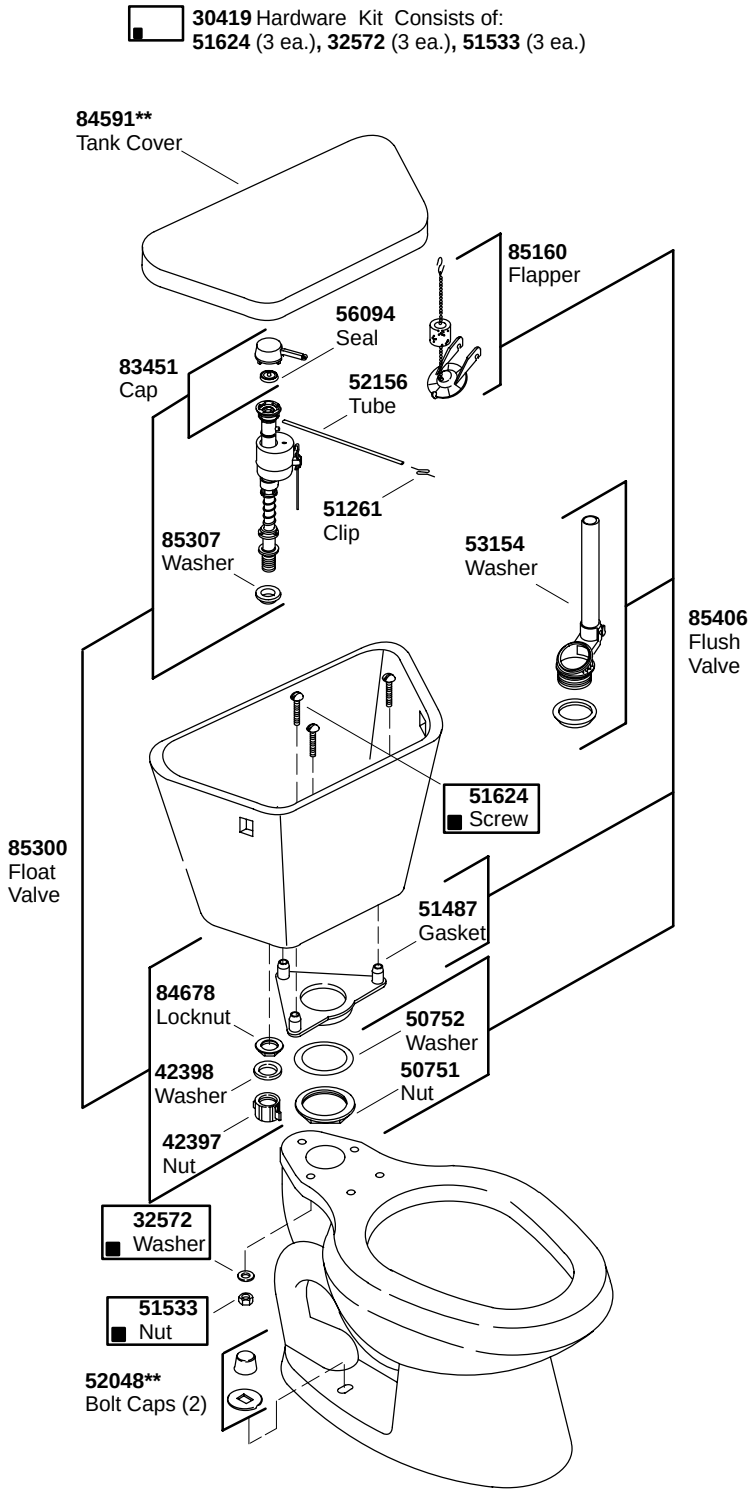


****Finish/color code must be specified when ordering.**