KOHLER®
SERVICE PARTS

STEAM GENERATOR

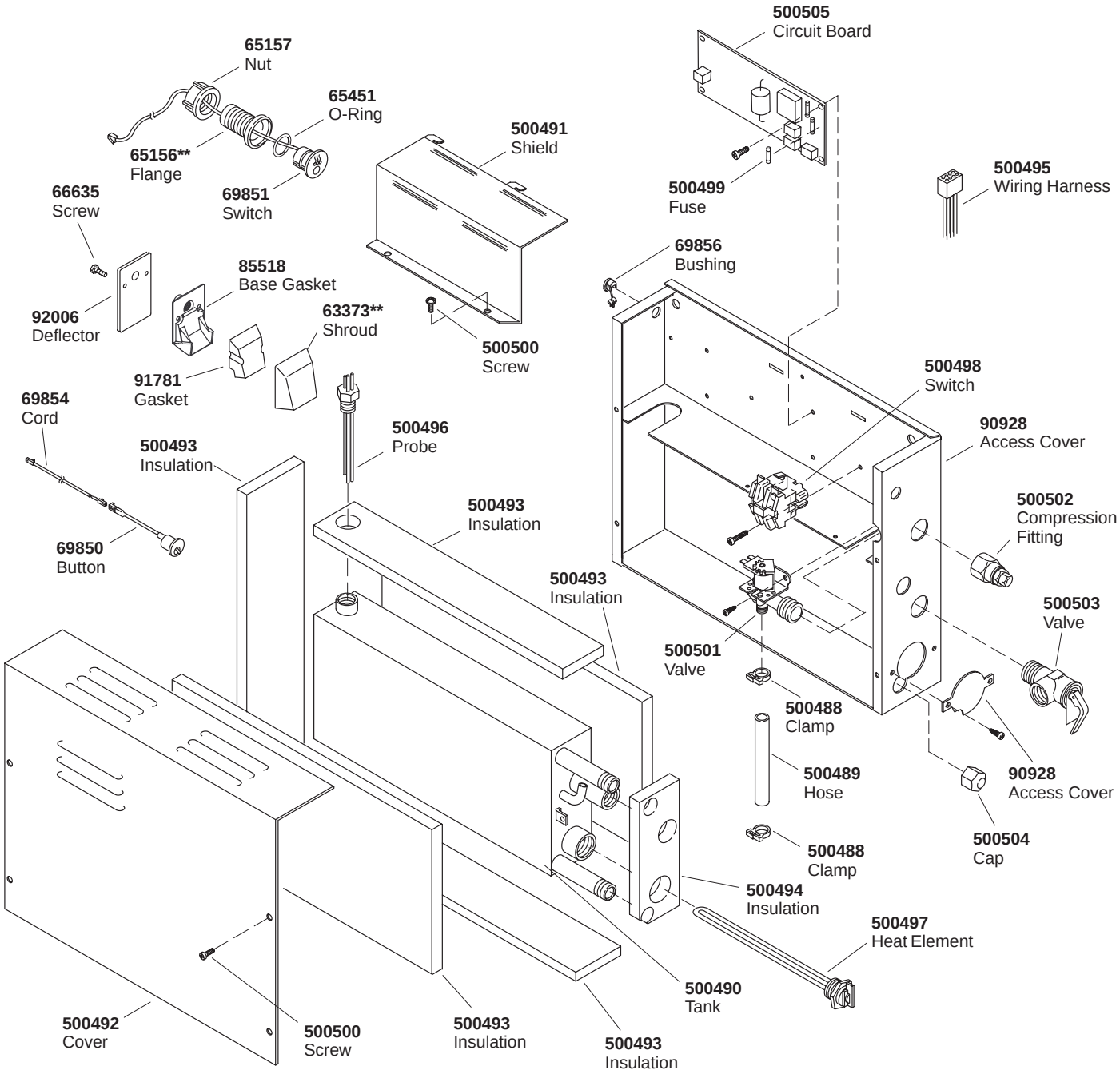

****Finish/color code must be specified when ordering.**