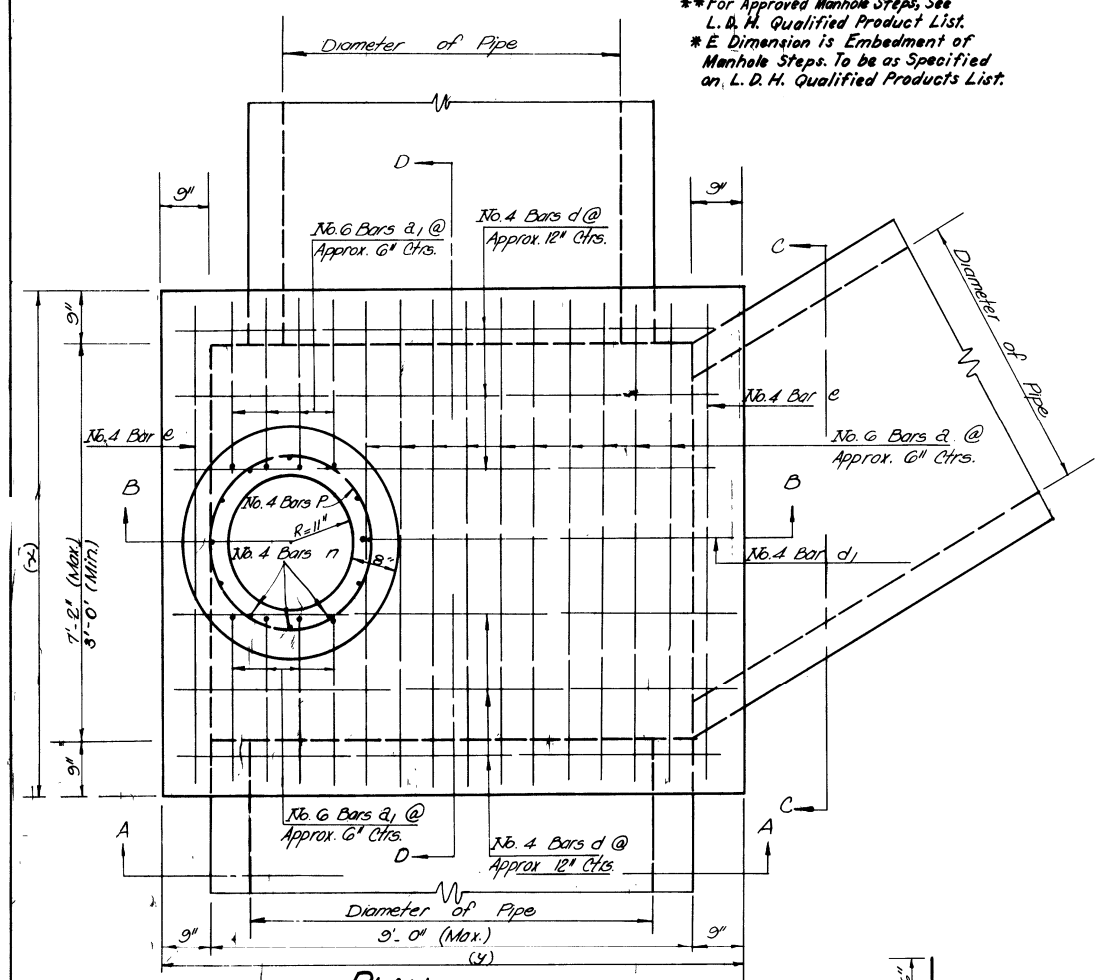

PLAN
(CAST IRON SEAT & COVER NOT SHOWN)

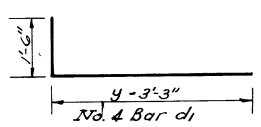

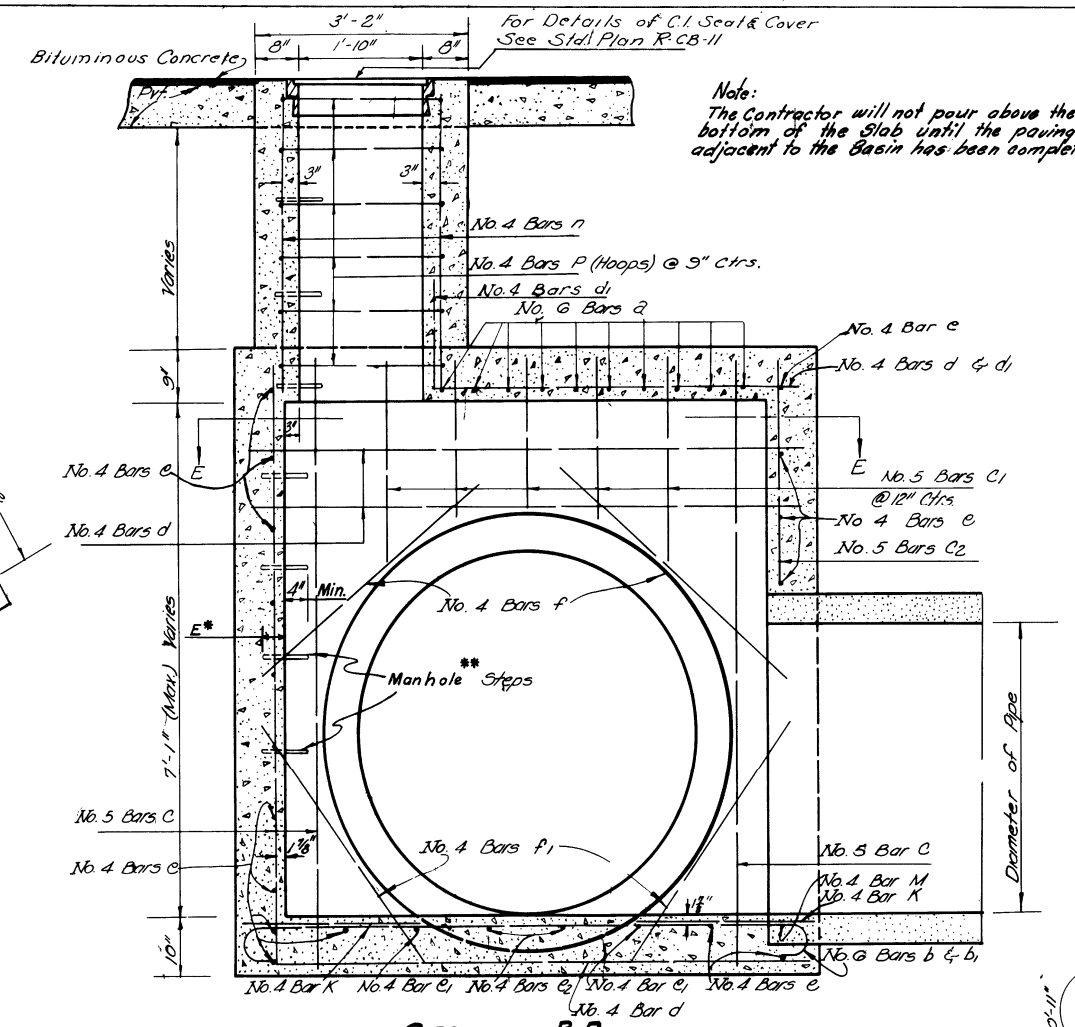

SECTION B-B
(C.I. Cover not Shown)

Note:
The Contractor will not pour above the bottom of the Slab until the paving adjacent to the Basin has been completed.

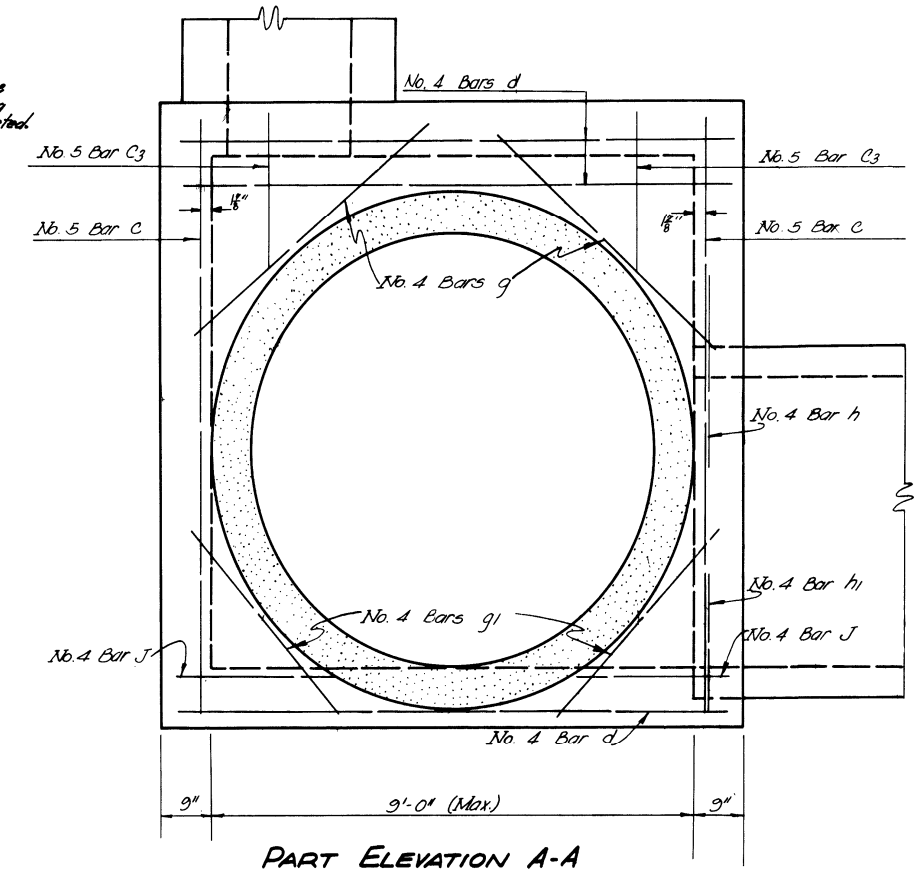

PART ELEVATION A-A

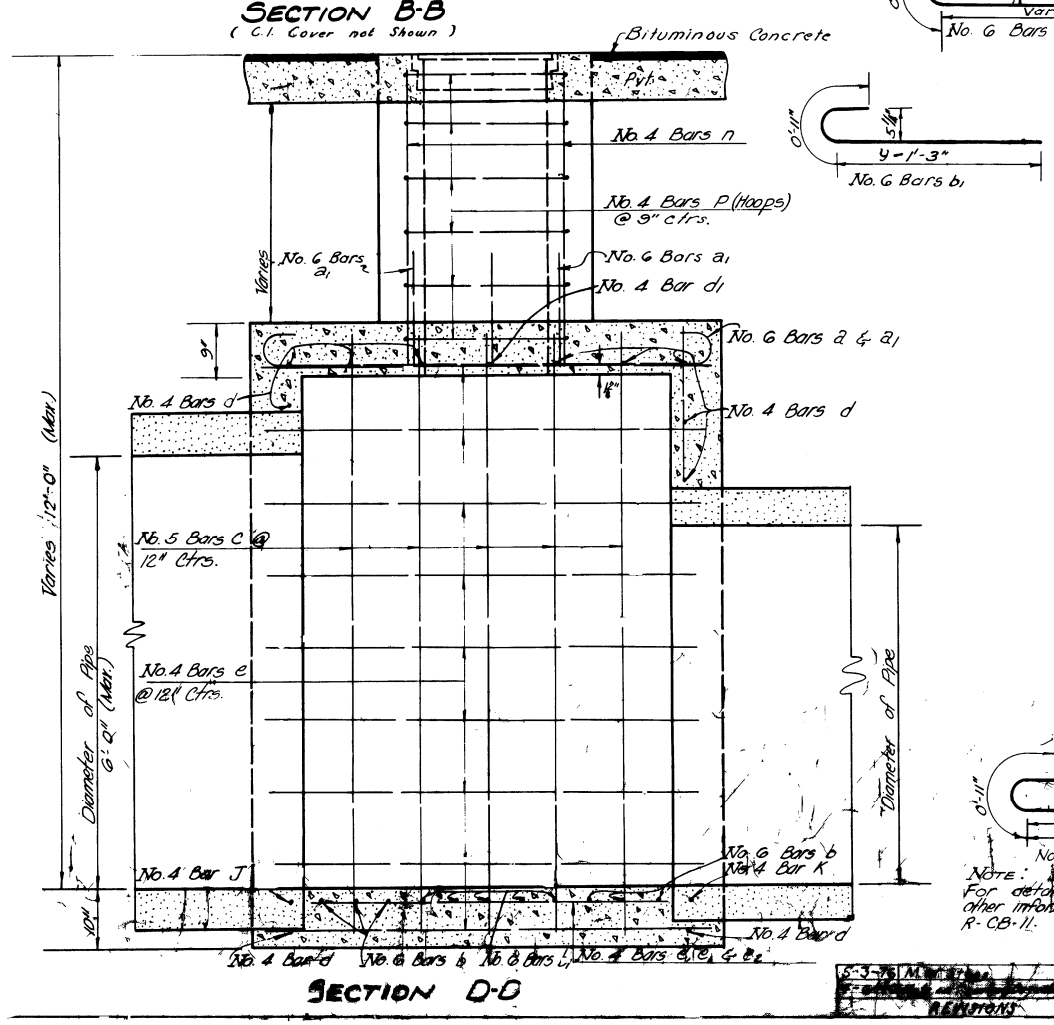

SECTION D-D

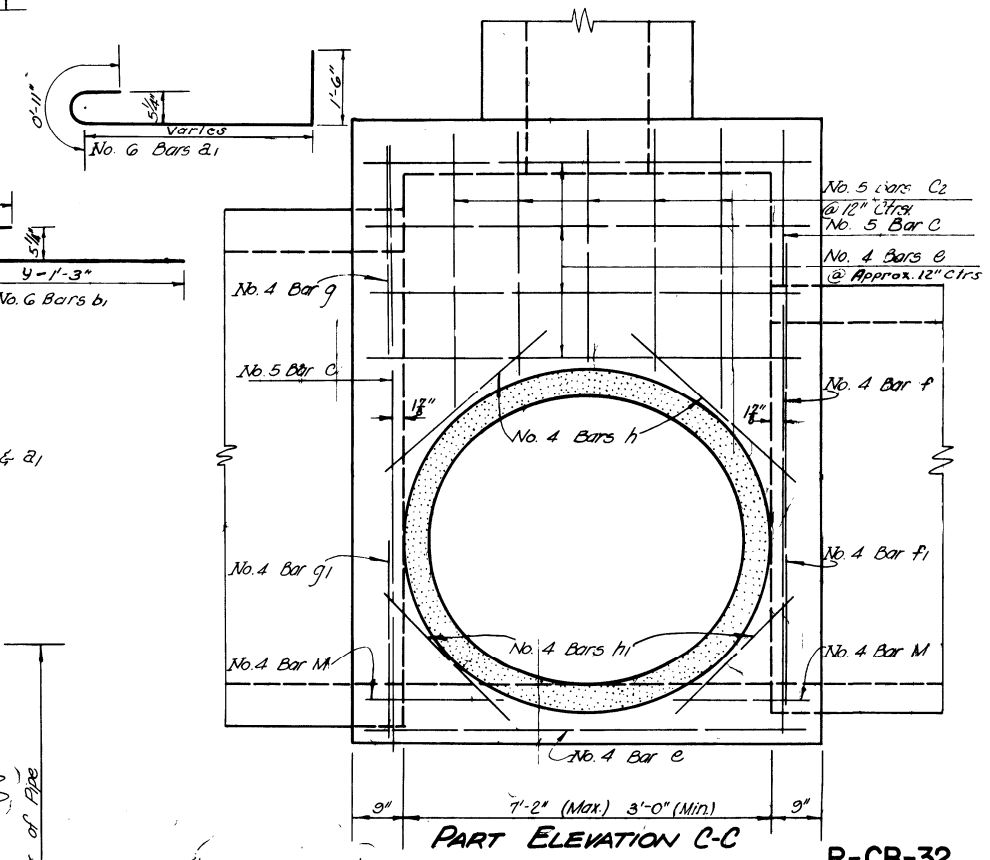

PART ELEVATION C-C

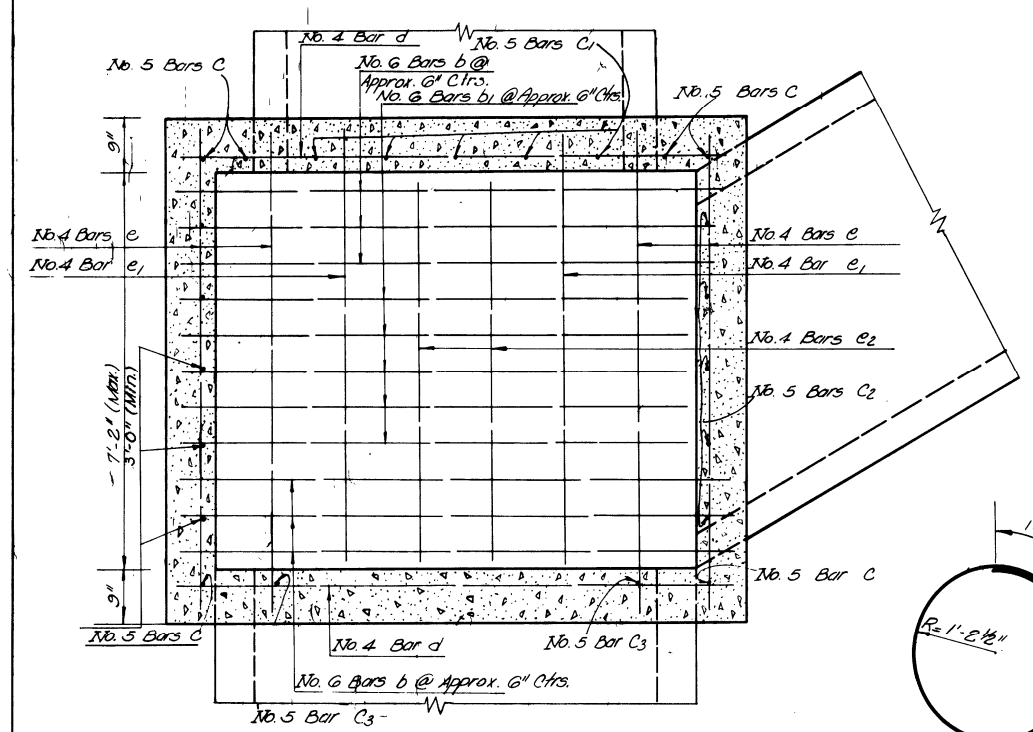

SECTION EE

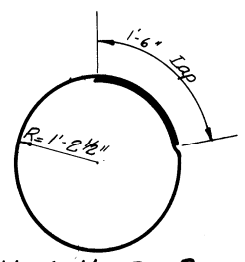

No. 4 HOOPS P
Unit Length: 9'-1"

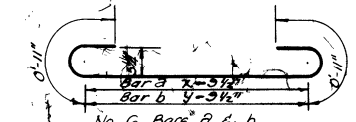

Note:
For details of C.I. Seat & Cover and any other information not shown See Std. Plan R-CB-11.

R-CB-32

STANDARD PLAN
R.C. MANHOLE
18" MAXIMUM PIPE CONNECTION
IN SIDE AND END WALLS
To be used in conjunction with Std. Plan R-CB-11
DATED Sept. 1, 1964

STATE OF LOUISIANA
DEPARTMENT OF HIGHWAYS

6-4-64	Delete [illegible]		
8-16-62	Stand [illegible]		
5-3-58	M. [illegible]	W. [illegible]	
[illegible]	[illegible]	[illegible]	
REVISIONS			

[illegible]	DETAILED [illegible]	TRACED	NO.
G.H.	CHK	CHECKED	

IN CHARGE OF Original Signed by Chief Engineer