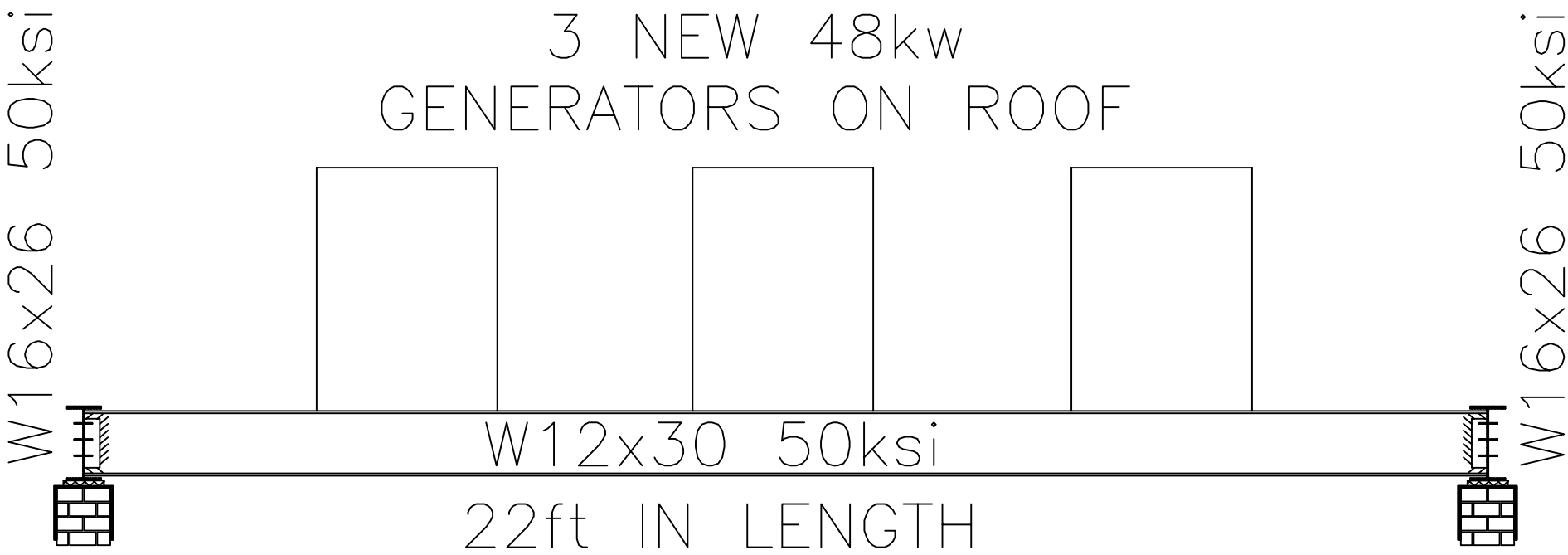
3 NEW 48kw
GENERATORS ON ROOF
W16x26 50ksi
W16x26 50ksi
W12x30 50ksi
22ft IN LENGTH

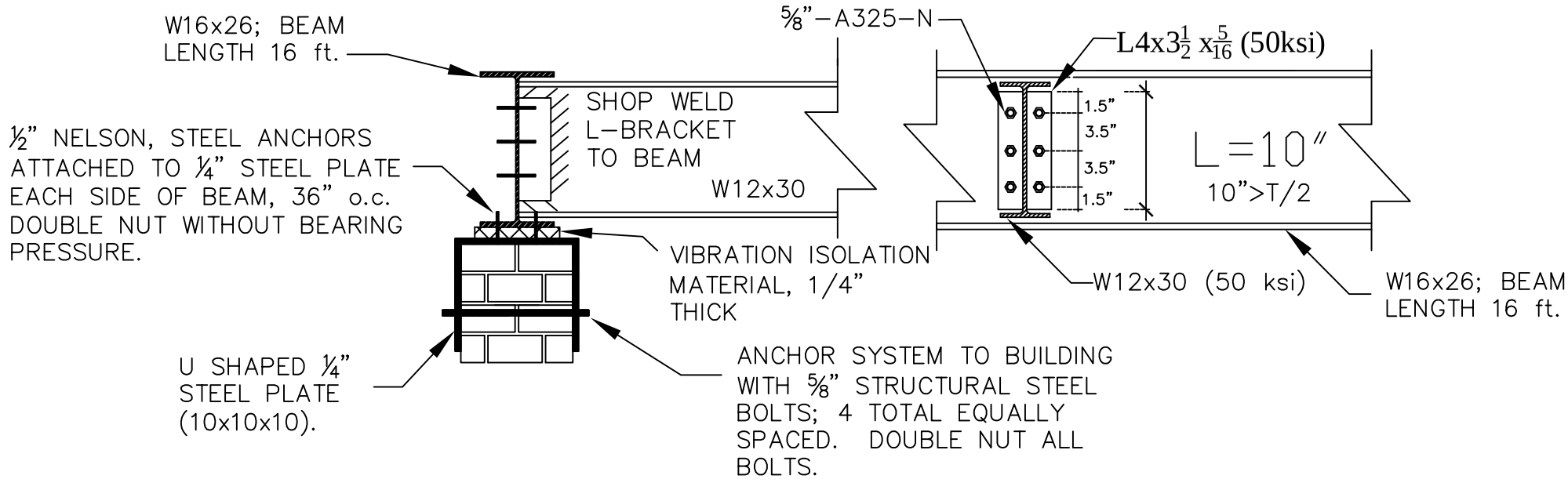
W16x26; BEAM
LENGTH 16 ft.
½" NELSON, STEEL ANCHORS
ATTACHED TO ¼" STEEL PLATE
EACH SIDE OF BEAM, 36" o.c.
DOUBLE NUT WITHOUT BEARING
PRESSURE.
SHOP WELD
L-BRACKET
TO BEAM
W12x30
VIBRATION ISOLATION
MATERIAL, 1/4"
THICK
U SHAPED ¼"
STEEL PLATE
(10x10x10).
ANCHOR SYSTEM TO BUILDING
WITH ⅝" STRUCTURAL STEEL
BOLTS; 4 TOTAL EQUALLY
SPACED. DOUBLE NUT ALL
BOLTS.
⅝"-A325-N
L4x3½ x5/16 (50ksi)
1.5"
3.5"
3.5"
1.5"
L=10"
10">T/2
W12x30 (50 ksi)
W16x26; BEAM
LENGTH 16 ft.