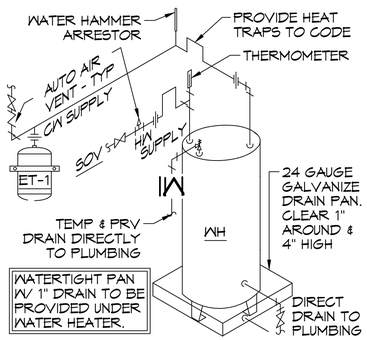


A WATER HEATER DETAIL

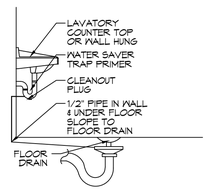


B FLOOR DRAIN DETAIL

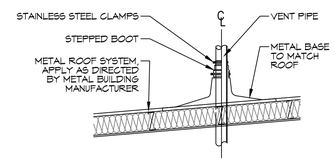


C VENT DETAIL

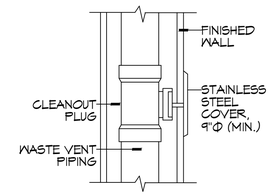


E WALL CLEANOUT DETAIL

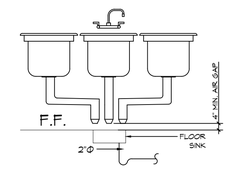


D HUB DRAIN DETAIL

## TYPICAL DETAILS

SCALE: NTS

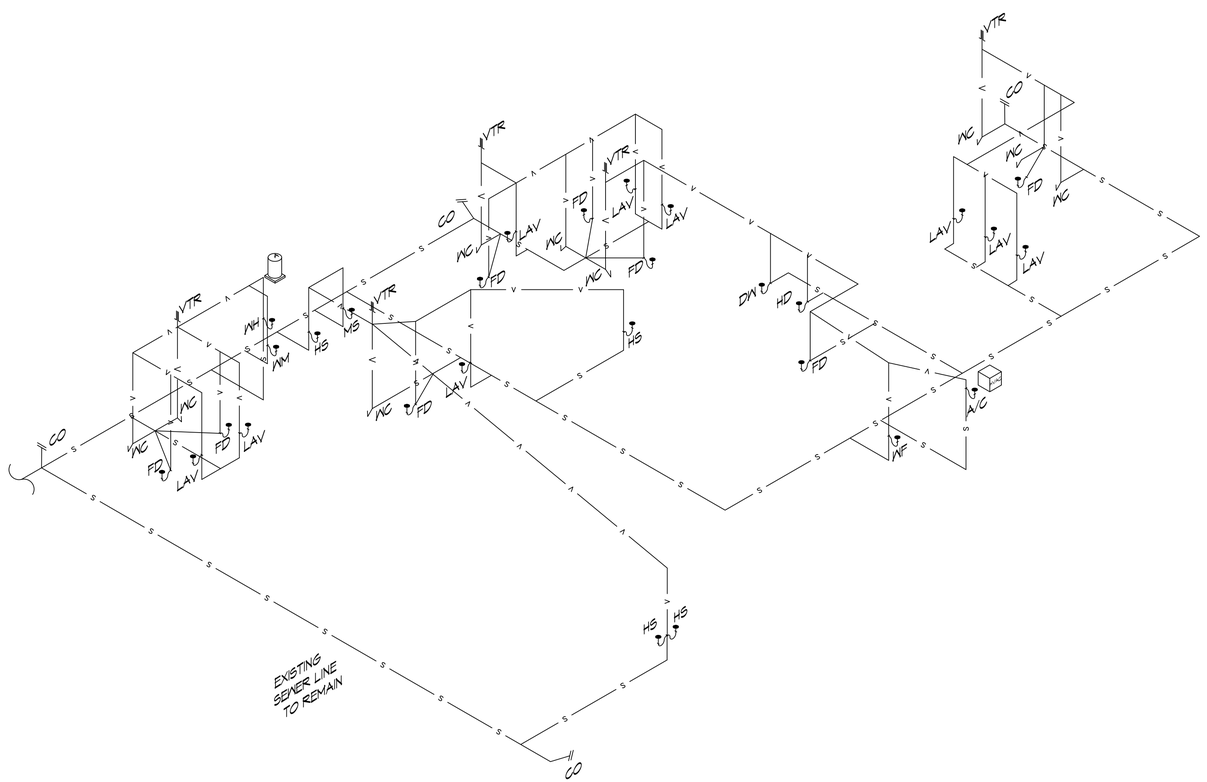


## 6 PLUMBING RISER

SCALE: 3/16"= 1'-0"

## GENERAL PLUMBING NOTES

1. PLUMBING LINES SHOWN ARE DRAWN DIAGRAMMATIC IN NATURE AND REPRESENT CONCEPTUAL ROUTING ONLY. CONTRACTOR IS RESPONSIBLE FOR FIELD VERIFICATION OF ALL ACTUAL CONDITIONS.
2. PROVIDE ALL LABOR, MATERIAL, TRANSPORTATION, SUPERVISION, CLEAN-UP, SERVICES, AND EQUIPMENT FOR A COMPLETE OPERATING SYSTEM. THE SYSTEM SHALL INCLUDE HOT AND COLD WATER PIPING, SEWER AND VENT PIPING, INSULATION, WATER HEATER, HANGERS, VALVES, SUPPORTS WITHOUT ANY RESTRICTIONS TO VOLUME. CUT AND PATCH AS REQUIRED TO INSTALL PIPES.
3. ALL WORK AND MATERIAL SHALL CONFORM STRICTLY TO THE LATEST LOCAL CITY, PARISH, STATE AND NATIONAL GOVERNING CODES. MUST MEET LA STATE PLUMBING CODE 2013 REQUIREMENTS.
4. CONTRACTOR IS TO FIELD VERIFY ALL EXISTING UTILITY LOCATIONS, ELEVATIONS AND SIZES PRIOR TO COMMENCING ANY WORK. CONTRACTOR SHALL PAY NECESSARY FEES FOR THE UTILITIES CONNECTIONS.
5. CONTRACTOR IS RESPONSIBLE TO VERIFY THE EXISTING INVERTS AND SET NEW INVERTS OF SENERAGE AND DRAINAGE PIPES.
6. SENERAGE LINES 3-INCH AND SMALLER SHALL BE SLOPED 1/4" PER FOOT AND LINES 4-INCH AND LARGER SHALL BE 1/8" PER FOOT.
7. TEST ALL PIPING AT REQUIRED PRESSURE.
8. ALL PLUMBING SHALL BE CLOSELY COORDINATED WITH STRUCTURAL, MECHANICAL SYSTEM AND ELECTRICAL SYSTEMS TO INSURE NO TRADES WILL CONFLICT WITH EACH OTHER.
9. DO NOT SCALE DRAWINGS. SEE ARCHITECTURAL DRAWINGS FOR EXACT LOCATIONS OF DOORS, WINDOWS, WALLS, FIXTURES, ETC.
10. ALL WATER MAINS AND PIPING NOT SHOWN FOR CLARITY, ALL LOCATIONS FIELD VERIFIED.
11. DOMESTIC HOT AND COLD WATER PIPING AND FITTINGS UNDER SLAB SHALL BE ASTM B88 COPPER WATER TUBE, TYPE K, SOFT ANNEALED. NO JOINTS SHALL BE ALLOWED UNDER THE SLAB.
12. DOMESTIC WATER PIPING AND FITTINGS ABOVE THE SLAB SHALL BE ASTM B88 COPPER WATERTUBE, TYPE L. HARD DRAWN WITH COPPER PRESSURE TYPE FITTINGS, ANSI B16.22. THE JOINTS SHALL BE SOLDERED TYPE USING ASTM B32, ALLOY GRADE 95A (95-5) SOLDER.
13. SOIL, WASTE, VENT PIPING AND FITTINGS ABOVE THE SLAB SHALL BE SERVICE WEIGHT CAST IRON PIPE WITH BELL AND SPIGOT ENDS AND ONE PIECE NEOPRENE INSERT TYPE GASKET. USE PVC SCHEDULE 40 OR ABS DWV PIPES AND FITTINGS WHERE PERMITTED BY CODE.
14. ALL WATER PIPING AND FITTINGS ABOVE THE FLOOR SHALL BE INSULATED WITH 1/2" THICK FIBERGLASS INSULATION AND JACKET.
15. ALL ELECTRICAL, MECHANICAL AND PLUMBING ELEMENTS PENETRATING FIRE PARTITIONS SHALL BE FIRE CAULKED. (PENETRATIONS THROUGH RATED CONSTRUCTION SHALL BE SEALED WITH A MATERIAL CAPABLE OF PREVENTING THE PASSAGE OF FLAMES AND HOT GASES WHEN TESTED IN ACCORDANCE WITH ASTM-E814.)
16. ALL VENTS THROUGH ROOF (VTR) SHALL BE LOCATED A MINIMUM OF 10'-0"FROM ANY MECHANICAL OR NATURAL AIR INTAKE.

## GENERAL PLUMBING FIXTURE NOTES

1. ALL WORK SHALL CONFORM TO INTERNATIONAL PLUMBING CODE
2. PROVIDE TRAP PRIMERS ON ALL FLOOR DRAINS.
3. PROVIDE ACCESS PANELS IN WALLS FOR ALL CLEANOUTS.
4. SIZE WATER PIPING FOR EACH FIXTURE GROUP PER SCHEDULE.
5. PROVIDE BALL VALVES AT ALL FIXTURE GROUPS TO ISOLATE WATER SUPPLIES.
6. PROVIDE AIR CHAMBERS ON HOT & COLD WATER AT EACH FIXTURE GROUP.
7. SIZE SEWER AND VENT PIPING PER PLUMBING FIXTURE TABLES.
8. MINIMUM VENT THRU ROOF SHALL BE 2".
9. PROVIDE 3/4" COLD WATER TO EACH ICE MACHINE, COFFEE MACHINE, AND DRINK MACHINES WITH WALL BOX AND SHUT OFF VALVE.
10. MINIMUM WATER PIPING SIZE TO SHOWER SHALL BE 1-1/4".
11. MINIMUM WATER PIPING SHALL BE 3/4".
12. MINIMUM SEWER FOR WATER CLOSET GROUP SHALL BE 4".
13. MINIMUM VENT FOR WATER CLOSET GROUP SHALL BE 3".

## PLUMBING FIXTURE SCHEDULE

| MARK | DESCRIPTION | TYPE | ROUGH - IN - SIZE | | | | NOTES |
|---|---|---|---|---|---|---|---|
| | | | WASTE | VENT | COLD | HOT | |
| WC | WATER CLOSET | VALVE | 4" | 3" | 1-1/2" | - | 3 |
| LAV | LAVATORY | WALL HUNG | 2" | 2" | 3/4" | 3/4" | 1,2,3 |
| FD | FLOOR DRAIN | - | 3" | 2" | - | - | 4 |
| FS | FLOOR SINK | - | 3" | 2" | - | - | 1 |
| HS | HAND SINK | - | 3" | 2" | 3/4" | 3/4" | 1,2,3 |
| MS | MOP SINK | - | 3" | 2" | 3/4" | 3/4" | - |
| WH | WATER HEATER | - | 3/4" | 2" | 3/4" | 3/4" | - |
| AHU | AIR HANDLER DRAIN | - | 3/4" | 2" | - | - | - |

NOTES:

1. INSULATE PIPING FOR HANDICAP FIXTURE.
2. PROVIDE CHAIR CARRIER FOR WALL HUNG FIXTURE.
3. HANDICAP FIXTURE
4. INSTALL CONTINUOUS DRIP VALVE ON ALL FLOOR DRAINS.
5. PROVIDE ASSE 1016 COMPLIANT VALVE

ALL SANITARY SEWER ARE DIAGRAMMATICALLY DRAWN FOR CLARITY.


DAMMON ENGINEERING, INC.
LOUISIANA & MISSISSIPPI
www.dammonengineering.com
info@dammonengineering.com
PH: 985.649.5832
Chief Engineer: Brian Mistich, PE
564 Groves Trail
Slidell, LA 70458


REVISIONS

| # | DESCRIPTION | DATE |
|---|---|---|
| | | |

SEAL:

STATE OF LOUISIANA
BRIAN A. MISTICH
License No. 30187
PROFESSIONAL ENGINEER

NEW DAYCARE
THREE PEAS IN A POD EARLY LEARNING CENTER
2965 GAUSE BLVD.
SLIDELL, LA 70461

JOB No: 2511 | DATE: 09-30-2025
DRAWN BY: LJP | CHECKED BY: BAM


These design documents, including all drawings, specifications and computer software, are instruments of service through which the Dammon Engineering, Inc. (DEI) performs its professional services. They are the property of DEI and may be used only for the purpose for which they have been provided and authorized in writing by DEI. Any other use or reproduction without written consent of DEI is prohibited. Visual contact with these documents shall constitute prima facie evidence of acceptance of these restrictions.


SHEET TITLE:
PLUMBING RISER AND DETAILS

DRAWING NUMBER:
P102

SHEET No: 9 of 12


FILE NAME: J:\- Commercial\Kaufman Dry Creek\Current Drawings\P102 - Plumbing Riser and Details.dwg PLOT DATE & TIME: Tuesday, September 30, 2025 4:39:22 PM