DESIGN CRITERIA

THE CONSTRUCTION FOR SAID RESIDENCE, WHERE Vult WIND SPEED IS 150 MILES PER HOUR, WIND EXPOSURE ZONE D, RISK CATEGORY II, IS DESIGNED IN ACCORDANCE WITH: AMERICAN FOREST AND PAPER ASSOCIATION (AF&PA) WOOD FRAME CONSTRUCTION MANUAL FOR ONE AND TWO FAMILY DWELLINGS (WFCM) 2001 EDITION AS WELL AS THE INTERNATIONAL RESIDENTIAL CODE (IRC) 2021 EDITION

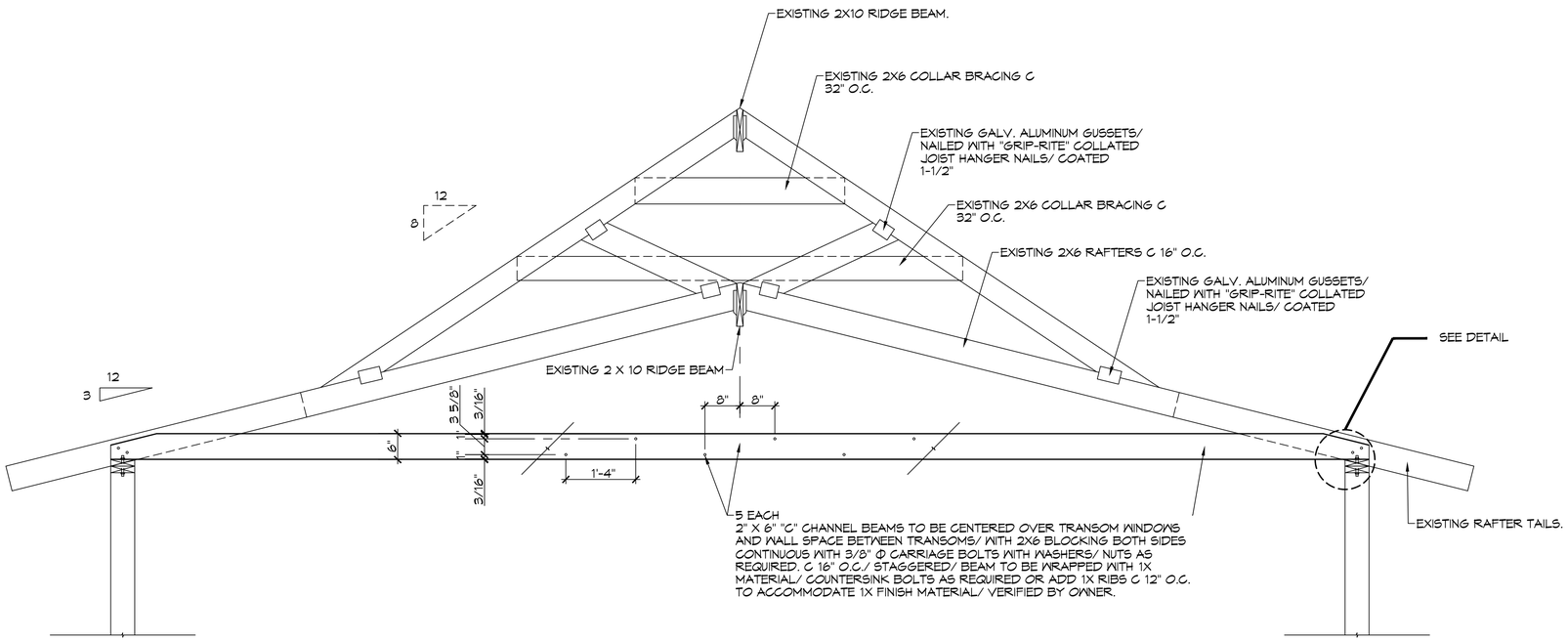

1 EXISTING CROSS SECTION WITH ADDED HORIZONTAL INTERMEDIATE "C" CHANNEL BEAMS (5 EACH)
SCALE: 3/4" = 1'-0"

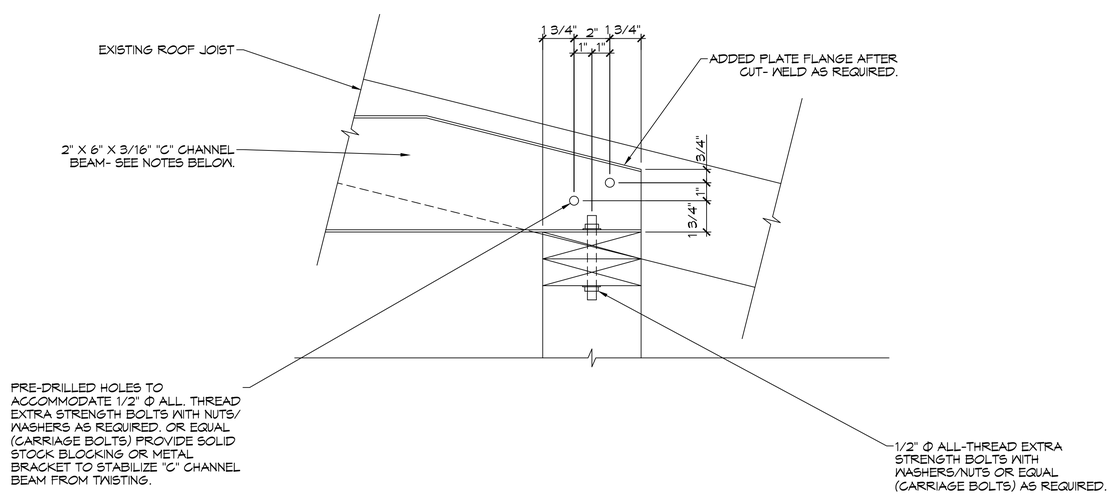

2 DETAIL
SCALE: 3" = 1'-0"

DAMMON ENGINEERING, INC.
LOUISIANA & MISSISSIPPI
www.dammonengineering.com
info@dammonengineering.com
PH: 985.649.5832
Chief Engineer: Brian Mistich, PE
554 Gibson Trail
Slidell, LA 70458

#	DESCRIPTION	DATE

REVISIONS

SEAL:

TIM AND DEBRA NORTON

415 SANDY HOOK DRIVE
PAGS CHRISTIAN MS. 39571

JOB No:
DATE: 01-20-2025
DRAWN BY: LJP
CHECKED BY: BAM

THE CONTENTS HEREIN ARE PROPRIETARY TO DAMMON ENGINEERING, INC. AND MAY NOT BE REPRODUCED OR DISTRIBUTED TO ANY THIRD PARTY WITHOUT THE EXPRESS WRITTEN CONSENT OF DAMMON ENGINEERING, INC. THE DRAWINGS AND SPECIFICATIONS ARE THE PROPERTY OF DAMMON ENGINEERING, INC. AND MUST BE RETURNED UPON REQUEST. THE DRAWINGS AND SPECIFICATIONS MAY BE USED FOR THE PROJECT FOR WHICH THEY WERE PREPARED AND SUBMITTED BY DAMMON ENGINEERING, INC. AND ARE OFFERED FOR USE ON THE PROJECT ONLY ON THE CONDITION THAT THEY ARE NOT TO BE REPRODUCED, PUBLISHED OR OTHERWISE DISPOSED OF WITHOUT THE EXPRESS WRITTEN CONSENT OF DAMMON ENGINEERING, INC.

SHEET TITLE:
FLOOR PLAN

DRAWING NUMBER:
A101

SHEET No: 3 of 1

FILE NAME: J:\- Foundations w/ Structural Only\Circle Gardens\Dwgs for Beam\A101 - Floor Plan.dwg PLOT DATE & TIME: Monday, January 20, 2025 11:17:01 AM