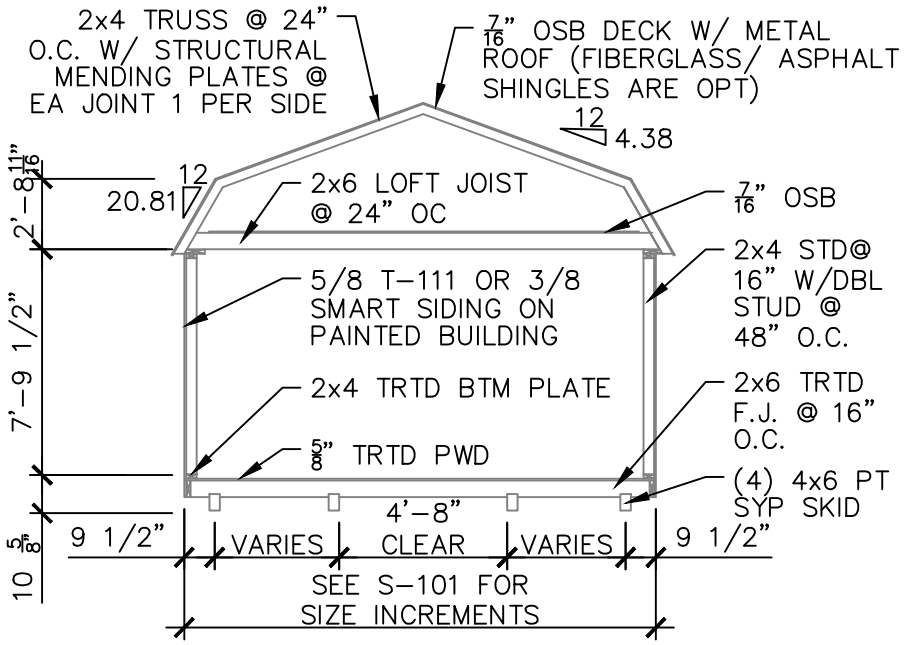

SECTION VIEW

ROOF FRAMING AND UNDERLAYMENT NOTES

1. PROVIDE A RIDGE VENT TYPICAL WITH INSECT SCREEN.
2. METAL ROOFING SHALL BE 29 GAUGE METAL IN ACCORDANCE WITH ASTM A 924 OR ASTM A 924M OVER OSB SHEATHING.
3. PROVIDE 29G RIDGE CAP, EAVE TRIM AND RAKE TRIM.
4. INSTALL AND FASTEN METAL ROOFING PER MANUFACTURER'S INSTRUCTIONS FOR WIND LOADING.
5. OPTIONAL SHINGLES SHALL BE IN ACCORDANCE WITH ASTM D 7158 TYPE H OR ASTM D 3161F TYPICAL.
6. INSTALL 1 LAYER OF 15 LB ROOFING FELT, START WITH A 19" WIDE STRIP PARALLEL WITH AND STARTING AT EAVES FASTENED SECURELY TO HOLD IN PLACE. START AT EAVE WITH A 38" WIDE SHEET WITH OVERLAPPING SUCCESSIVE SHEETS BY 19". FASTEN UNDERLAYMENT W/ CORROSION- RESISTANT FASTENERS PER MANUFACTURER'S INSTRUCTIONS AND SPACED A MAXIMUM OF 36" APART.
7. METL ROOF OR OPT 25Y FBR GLASS SHINGLE OVER (1) LAYER OF 15LB FELT PAPER OVER 7/16" OSB SHEATHING

APEX BUILDERS & ASSOCIATES
504-858-6544

APEX BUILDERS AND ASSOCIATES

DRAWN BY: TNT	SCALE: 1/4" = 1'-0"	DATE: 02-03-2022

SHEET TITLE: SECTION PLAN

DRAWING NUMBER: S-106

UTILITY-LA-V=150MPH-IBC2015

DAMMON ENGINEERING, INC.
554 Old Spanish Trail Slidell, LA 70458 (985) 649-5832

Chief Engineer: Brian Mistich, PE
554 Old Spanish Trail
Slidell, LA 70458

www.dammonengineering.com
info@dammonengineering.com
PHONE: 985-649-5832