SITE SPECIFIC NOTES:

1. AN LA LICENSED SURVEYOR SHALL PIN THE SOUTHERN RIGHT OF WAY (ROW) OF HWY 16 BETWEEN THE ACCESS RD FOR INTERSTATE I-55 AND PULESTON ROAD.
2. CONTRACTOR SHALL TRENCH OR HORIZONTALLY DIRECTIONAL DRILL (BORE) 6" HDPE FORCE MAIN ALONG THE SOUTHERN ROW FOR HWY 16 BETWEEN THE LIFT STATION NEAR THE ACCESS RD FOR INTERSTATE I-55 AND PULESTON ROAD. THE FORCE MAIN SHALL BE PLACED APPROXIMATELY ONE (1) FOOT WITHIN LA HWY 16 ROW AND SHALL BE A MINIMUM OF 3 FT BELOW GRADE.
3. CONTRACTOR SHALL UTILIZE METHODS IN ACCORDANCE WITH THE LATEST EDITION OF LA DOTD STANDARD SPECIFICATION FOR ROADS AND BRIDGES.

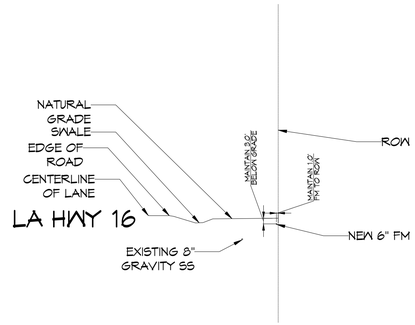

B M101A M101A TYPICAL SECTION N.T.S

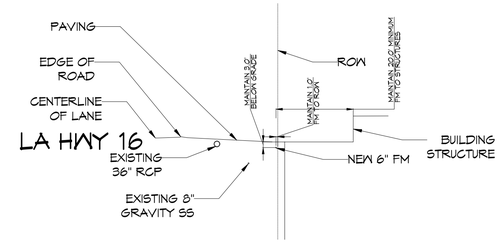

C M101A M101A TYPICAL SECTION N.T.S

LEGEND

FM	6" FORCE MAIN
SS	GRAVITY FED SEWER
	POWER POLE
S	SANITARY SEWER MAN HOLE
X	EXISTING ELEVATION
STA=0+00' EL=101.1'	STATION # ELEVATION

ABBREVIATIONS

CMP = CORRUGATED METAL PIPE
EOR = EDGE OF ROAD
FM = FORCE MAIN
HWY 16 = LA STATE HIGHWAY 16
I-55 = INTERSTATE 55
RCP = ROUND CORRUGATED PIPE
RCPA = ROUND CORRUGATED PIPE-ARCH
ROW = RIGHT OF WAY

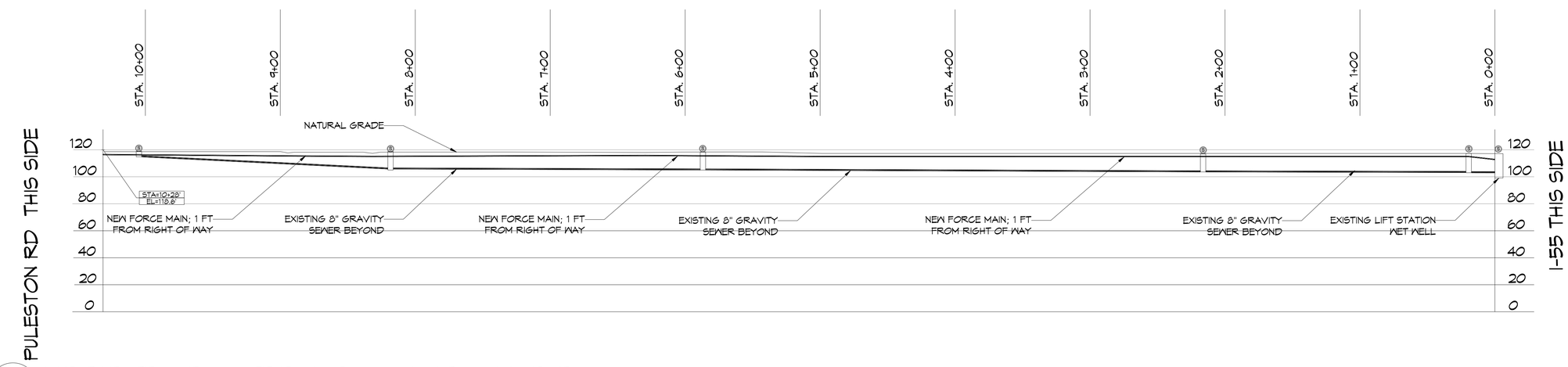

A M101A M101A PRE-TREATED LEACHATE FORCE MAIN PARTIAL PROFILE 1" = 40'

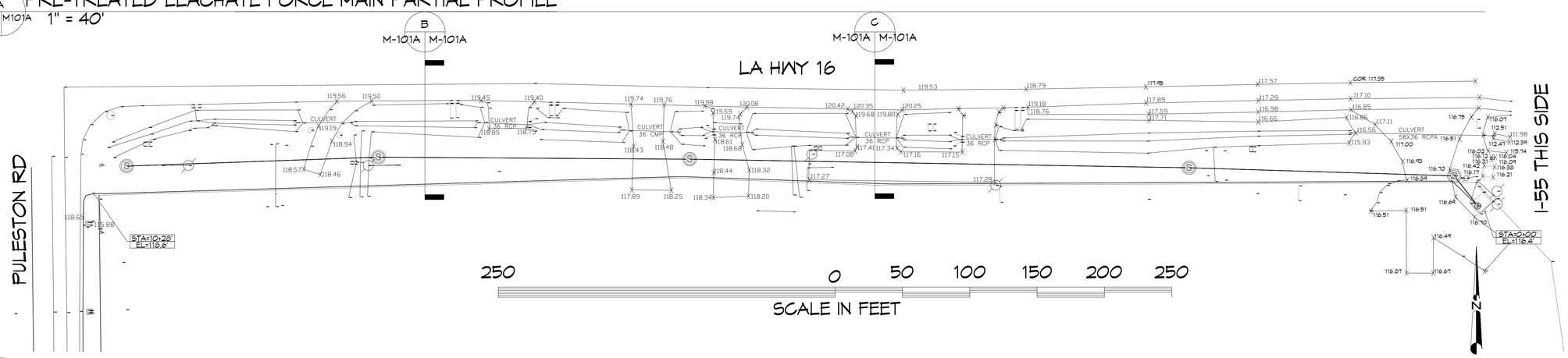

2 M101A M101 PRE-TREATED LEACHATE FORCE MAIN PARTIAL SITE PLAN 1" = 40'

DAMMON ENGINEERING, INC.
LOUISIANA & MISSISSIPPI
www.dammonengineering.com
info@dammonengineering.com
PH: 985.649.5832
Chief Engineer: Brian Mistich, PE
554 Old Spanish Trail
Slidell, LA 70458

REVISIONS

#	DESCRIPTION	DATE

SEAL: STATE OF LOUISIANA — BRIAN A. MISTICH — License No. 30187 — PROFESSIONAL ENGINEER — 2/21/2025

The Contractor is responsible for the protection, support and maintenance of all utilities and appurtenances, whether shown on the plans or not, and shall notify the owners of all utilities 72 hours prior to any excavation. Contractor is responsible for the protection of all adjacent structures and property. Contractor shall be responsible for all damages to all structures and property as a result of his operations. Contractor shall be responsible for all costs associated with the repair of damaged utilities and structures. Contractor shall be responsible for all costs associated with the protection of utilities and structures.

NEW FORCEMAIN
TANGIPAHOA PARISH LANDFILL
AMITE CITY, LA

JOB No:	2490
DATE:	2-21-2025
DRAWN BY:	DPD
CHECKED BY:	BM

SHEET TITLE: FORCE MAIN HWY 16

DRAWING NUMBER: M101A

SHEET No: 3 of 7

FILE NAME: J:\1-Dammon\2490 - Tang Solidow Pond Force Main\Drawings\Current\M-101 Overall Site Plan.dwg, PLOT DATE & TIME: Thursday, February 27, 2025 2:54:27 PM