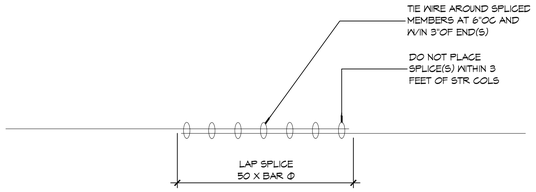

14 S501|S101 **FOUNDATION DETAIL**
SCALE: NTS

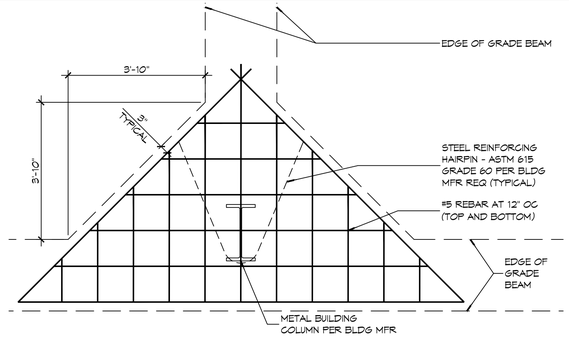

13 S501|S101 **FOUNDATION DETAIL**
SCALE: 1/2" = 1'-0"

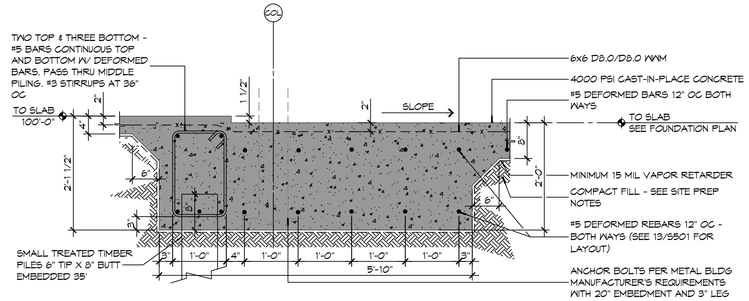

12 S501|S101 **FOUNDATION DETAIL**
SCALE: 3/4" = 1'-0"

GENERAL FOUNDATION NOTES

1. CONCRETE REINFORCING STEEL SHALL CONFORM TO THE REQUIREMENTS OF ASTM A605, GRADE 60. REINFORCING TO BE WELDED SHALL CONFORM TO THE REQUIREMENTS OF ASTM A706, GRADE 60, UNLESS NOTED OTHERWISE.
2. FABRICATION OF REINFORCING STEEL SHALL BE IN ACCORDANCE WITH THE DETAILS OF ACI315-99, "DETAILING OF CONCRETE REINFORCEMENT".
3. CORNER BARS SHALL BE PROVIDED AT ALL CORNERS AND INTERSECTIONS OF CONCRETE BEAMS, GRADE BEAMS, WALLS, AND STEM WALLS.
4. UNLESS NOTED OTHERWISE, CONCRETE COVER SHALL CONFORM TO THE MINIMUMS REQUIRED BY ACI318-08.
5. THE CONTRACTOR SHALL BE RESPONSIBLE FOR THE STABILITY OF THE STRUCTURE DURING CONSTRUCTION.
6. WORK NOT INDICATED AS PART OF THE DRAWINGS BUT REASONABLY IMPLIED TO BE SIMILAR TO THAT A CORRESPONDING PLACES SHALL BE REPEATED.
7. ALL EXCAVATIONS FOR FOOTINGS OR PILE CAPS SHALL BE MADE TO GRADES SHOWN. CONTRACTOR SHALL TAKE MEASURES TO PREVENT CAVE-IN OF THE FOOTING EXCAVATION. THESE MEASURES MAY INCLUDE CUTTING BACK THE SIDE SLOPES AND/OR THE USE OF SIDE FORMS.

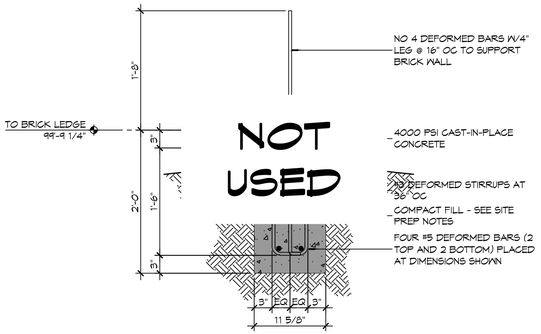

11 S501|S101 **FOUNDATION DETAIL**
SCALE: 1" = 1'-0"

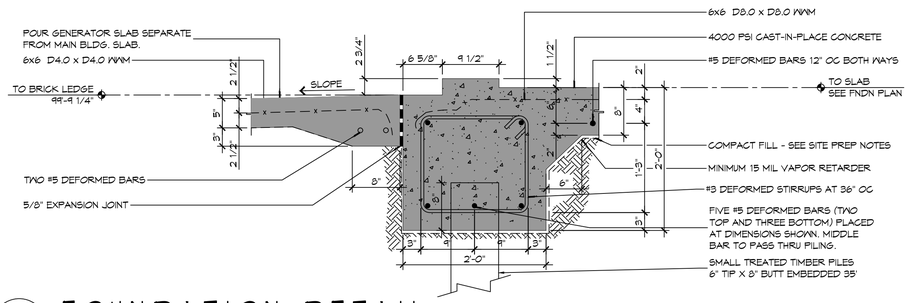

10 S501|S101 **FOUNDATION DETAIL**
SCALE: 1" = 1'-0"

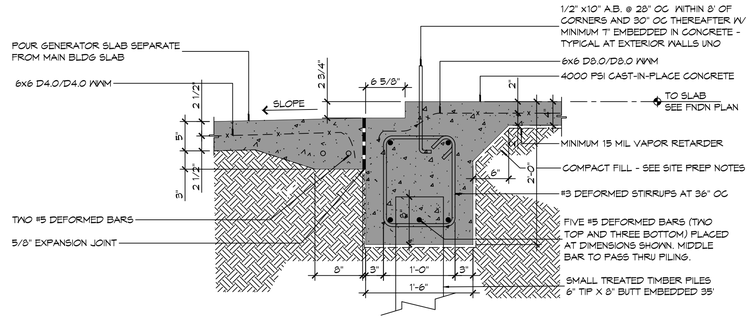

9 S501|S101 **FOUNDATION DETAIL**
SCALE: 1" = 1' - 0"

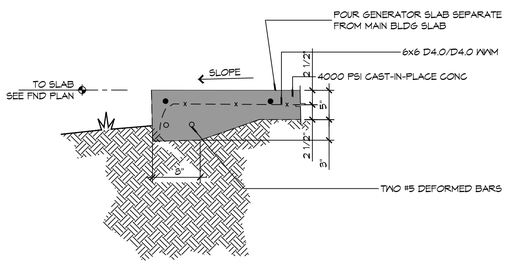

8 S501|S101 **FOUNDATION DETAIL**
SCALE: 1" = 1'-0"

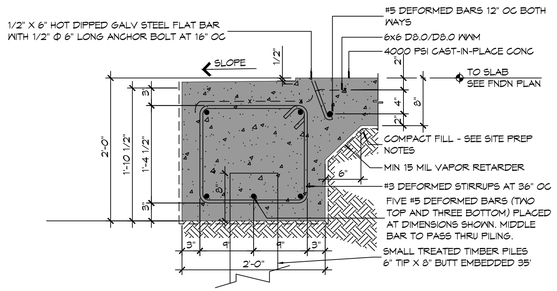

7 S501|S101 **FOUNDATION DETAIL**
SCALE: 1" = 1'-0"

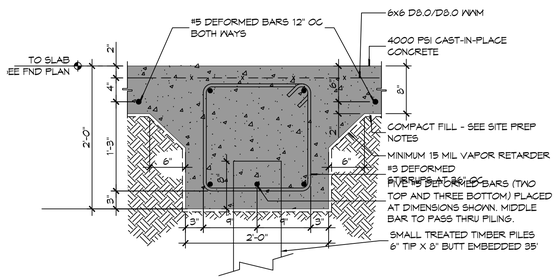

6 S501|S101 **FOUNDATION DETAIL**
SCALE: 1" = 1'-0"

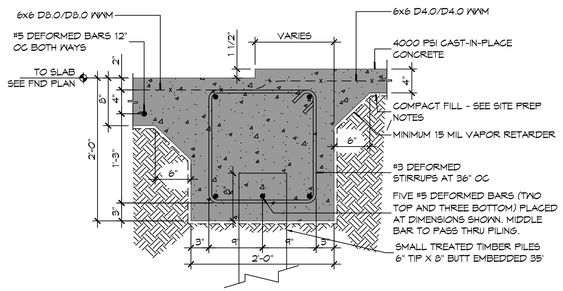

5 S501|S101 **FOUNDATION DETAIL**
SCALE: 1" = 1'-0"

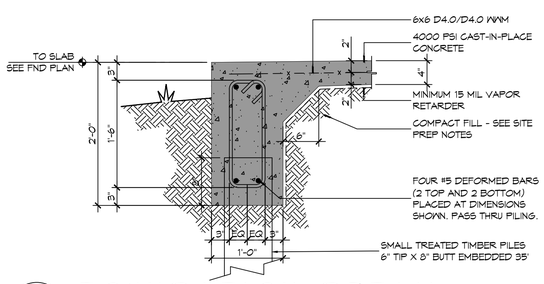

4 S501|S101 **FOUNDATION DETAIL**
SCALE: 1" = 1'-0"

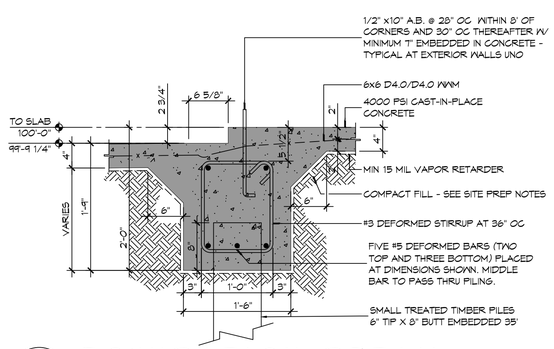

3 S501|S101 **FOUNDATION DETAIL**
SCALE: 1" = 1'-0"

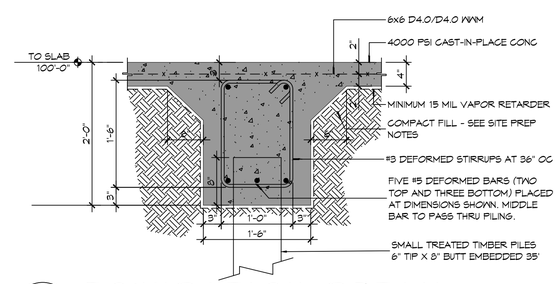

2 S501|S101 **FOUNDATION DETAIL**
SCALE: 1" = 1'-0"

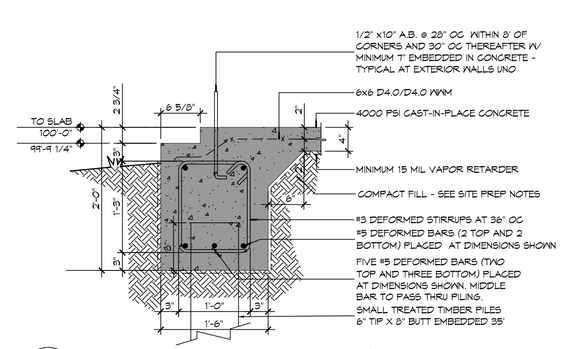

1 S501|S101 **FOUNDATION DETAIL**
SCALE: 1" = 1'-0"

DAMMON ENGINEERING, INC.
LOUISIANA & MISSISSIPPI
www.dammonengineering.com
info@dammonengineering.com
PH: 985.649.5832
Chief Engineer: Brian Mistich, PE
5540 Highway 90 East
Slidell, LA 70458

#	DESCRIPTION	DATE
	REVISIONS	

SEAL:

STATE OF LOUISIANA — BRIAN A. MISTICH License No. 30187 — PROFESSIONAL ENGINEER

NEW FIRE STATION #10
ST. TAMMANY FIRE PROTECTION DISTRICT NO. 1
2745 LAKESHORE VISTA BLVD
SLIDELL, LA 70461

JOB NO:	2519
DATE:	12-03-2025
DRAWN BY:	CKD
CHECKED BY:	BAM

THIS DOCUMENT IS PROPERTY OF DAMMON ENGINEERING, INC. AND IS NOT TO BE USED FOR ANY OTHER PROJECT, NOR SHALL IT BE REPRODUCED IN WHOLE OR IN PART WITHOUT THE WRITTEN PERMISSION OF DAMMON ENGINEERING, INC. ANY REPRODUCTION OF THIS DOCUMENT, OR ANY PART THEREOF, WITHOUT THE WRITTEN PERMISSION OF DAMMON ENGINEERING, INC. IS PROHIBITED. THE INFORMATION HEREIN IS THE EXCLUSIVE PROPERTY OF DAMMON ENGINEERING, INC. AND SHALL NOT BE COPIED OR USED FOR ANY PURPOSE WHATSOEVER, NOR SHALL IT BE MADE KNOWN IN ANY MANNER TO ANY PERSON OR ENTITY OTHER THAN THE OWNER OF THIS PROJECT, EXCEPT TO THE EXTENT REQUIRED FOR THE PERFORMANCE OF THE WORK ON THIS PROJECT. THE OWNER OF THIS PROJECT IS AUTHORIZED TO REPRODUCE THIS DOCUMENT FOR THE PURPOSE OF CONSTRUCTION OF THE PROJECT.

SHEET TITLE:
FOUNDATION DETAILS

DRAWING NUMBER:
S501

SHEET No: 15 of 37