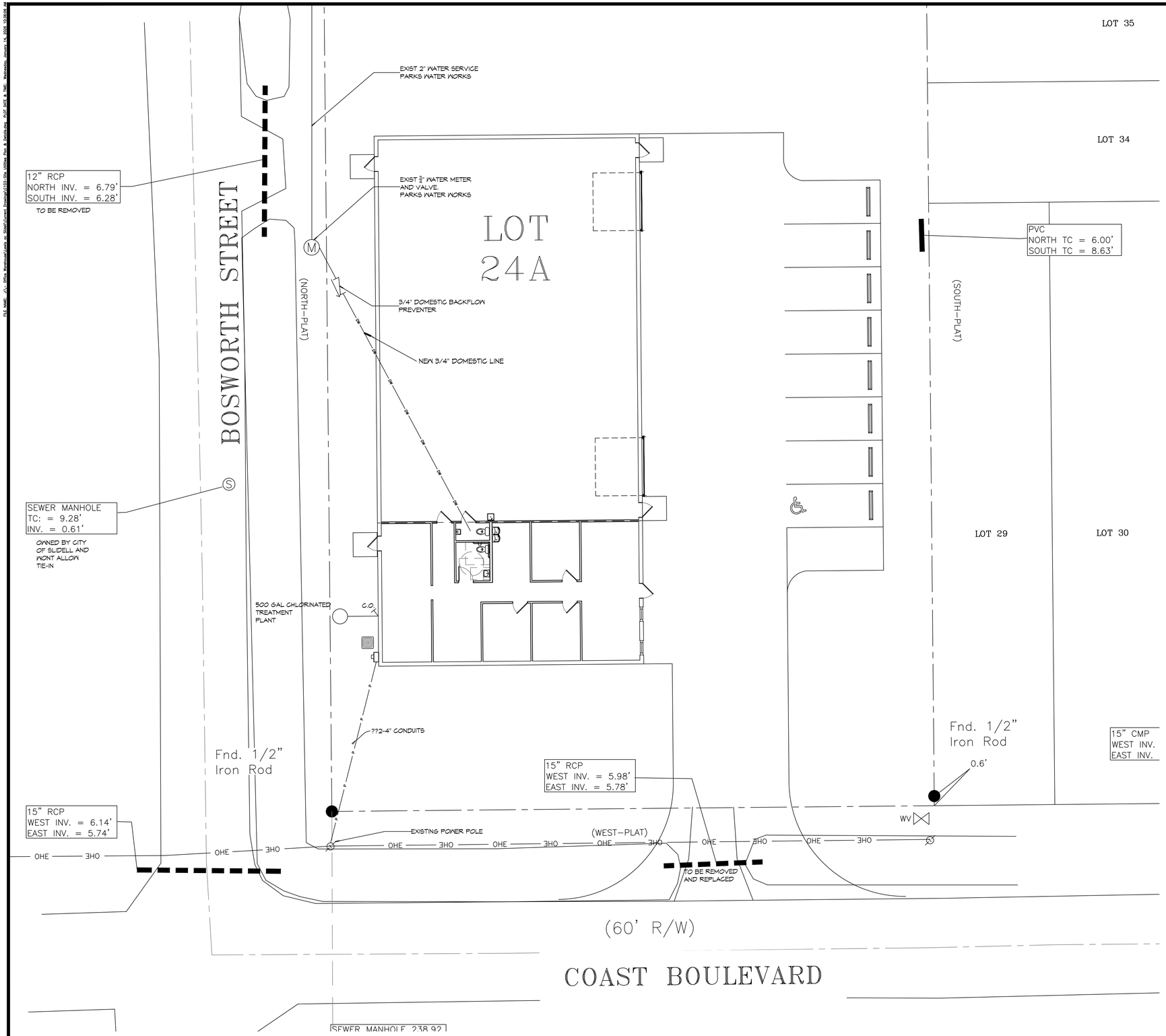

1 SITE UTILITIES PLAN
SCALE: 1" = 10'

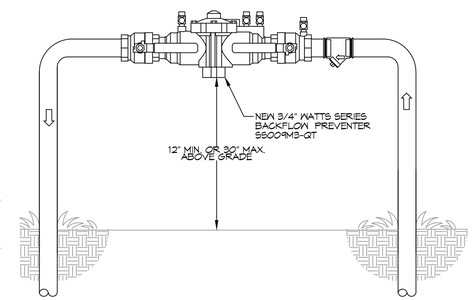

2 TYPICAL RISER DETAIL
SCALE: N.T.S.
TYPICAL

GENERAL SITE UTILITIES NOTES

1. ALL CONSTRUCTION SHALL COMPLY WITH CONTRACT SPECIFICATIONS AND APPLICABLE LOCAL, STATE, AND FEDERAL STANDARDS AND REGULATIONS.
2. CONSTRUCTION SHALL NOT INTERRUPT EXISTING UTILITIES.
3. ALL DISTURBED GROUND SHALL BE RESTORED IN KIND TO A CONDITION EQUAL TO OR BETTER THAN ORIGINALLY FOUND.
4. SOIL EROSION CONTROL SHALL BE IN ACCORDANCE WITH THESE DOCUMENTS.
5. PROTECT EXISTING UTILITY LINES FROM DAMAGE. FOLLOW INDIVIDUAL UTILITY'S RECOMMENDATIONS FOR UTILITY LINE PROTECTION.
6. CONTRACTOR SHALL IMMEDIATELY REPORT ALL DAMAGE TO UTILITY LINES TO BOTH UTILITY COMPANY AND ENGINEER.
7. ALL DAMAGE CAUSED TO EXISTING UTILITY LINES BY CONTRACTOR'S OPERATIONS SHALL BE REPAIRED BY THE CONTRACTOR TO COMPLETE SATISFACTION OF THE UTILITY COMPANY AND ENGINEER.
8. LOCATION OF EXISTING UTILITIES IS APPROXIMATE. CONTRACTOR SHALL FIELD VERIFY EXACT LOCATIONS.
9. CONTRACTOR IS RESPONSIBLE FOR CUT AND CAP OF EXISTING UTILITIES PRIOR TO ANY DEMOLITION.
10. CONTRACTOR SHALL CONTACT LOUISIANA ONE CALL PRIOR TO COMMENCEMENT OF SITE EXCAVATION.

SITE UTILITIES LEGEND

—— DW ——	NEW WATER LINE
—— P ——	UNDERGROUND POWER
Ⓜ	EXISTING WATER METER
	(BACK FLOW PREVENTER)

DAMMON ENGINEERING, INC.
LOUISIANA & MISSISSIPPI
www.dammonengineering.com
info@dammonengineering.com
PH: 985.649.5832
Chief Engineer: Brian Mistich, PE
5500 Oakwood Trail
Slidell, LA 70458

#	DESCRIPTION	DATE

REVISIONS

SEAL:

NEW OFFICE WAREHOUSE
LEWIS A/C
3910A COAST BOULEVARD
SLIDELL, LA 70460

JOB No:		DATE:	1-12-2026
DRAWN BY:	CKD	CHECKED BY:	BAM

THIS DRAWING AND ALL DATA CONTAINED HEREIN IS THE PROPERTY OF DAMMON ENGINEERING, INC. AND SHALL REMAIN THE PROPERTY OF DAMMON ENGINEERING, INC. THIS DRAWING AND DATA CONTAINED HEREIN SHALL NOT BE DISCLOSED TO OTHERS OR DUPLICATED, USED OR DISCLOSED FOR ANY PURPOSE EXCEPT THE PURPOSE FOR WHICH IT IS LOANED. THIS DRAWING AND DATA CONTAINED HEREIN IS LOANED TO THE OWNER OF THE PROPERTY OF DAMMON ENGINEERING, INC. FOR USE ON THE PROJECT FOR WHICH THE DATA WAS PREPARED AND PROVIDED. WITHOUT WRITTEN CONSENT OF DAMMON ENGINEERING, INC. THE DRAWING AND DATA CONTAINED HEREIN SHALL NOT BE USED ON OTHER PROJECTS OR FOR ANY OTHER PURPOSE.

SHEET TITLE:
SITE UTILITY PLAN

DRAWING NUMBER:
C103

SHEET No: 7 of 1

FILE NAME: J:\- Office Warehouse\Lewis a/c Slidell\Current Drawings\C103-Site Utilities Plan & Detailing PLOT DATE & TIME: Wednesday, January 14, 2026 10:56:06 AM

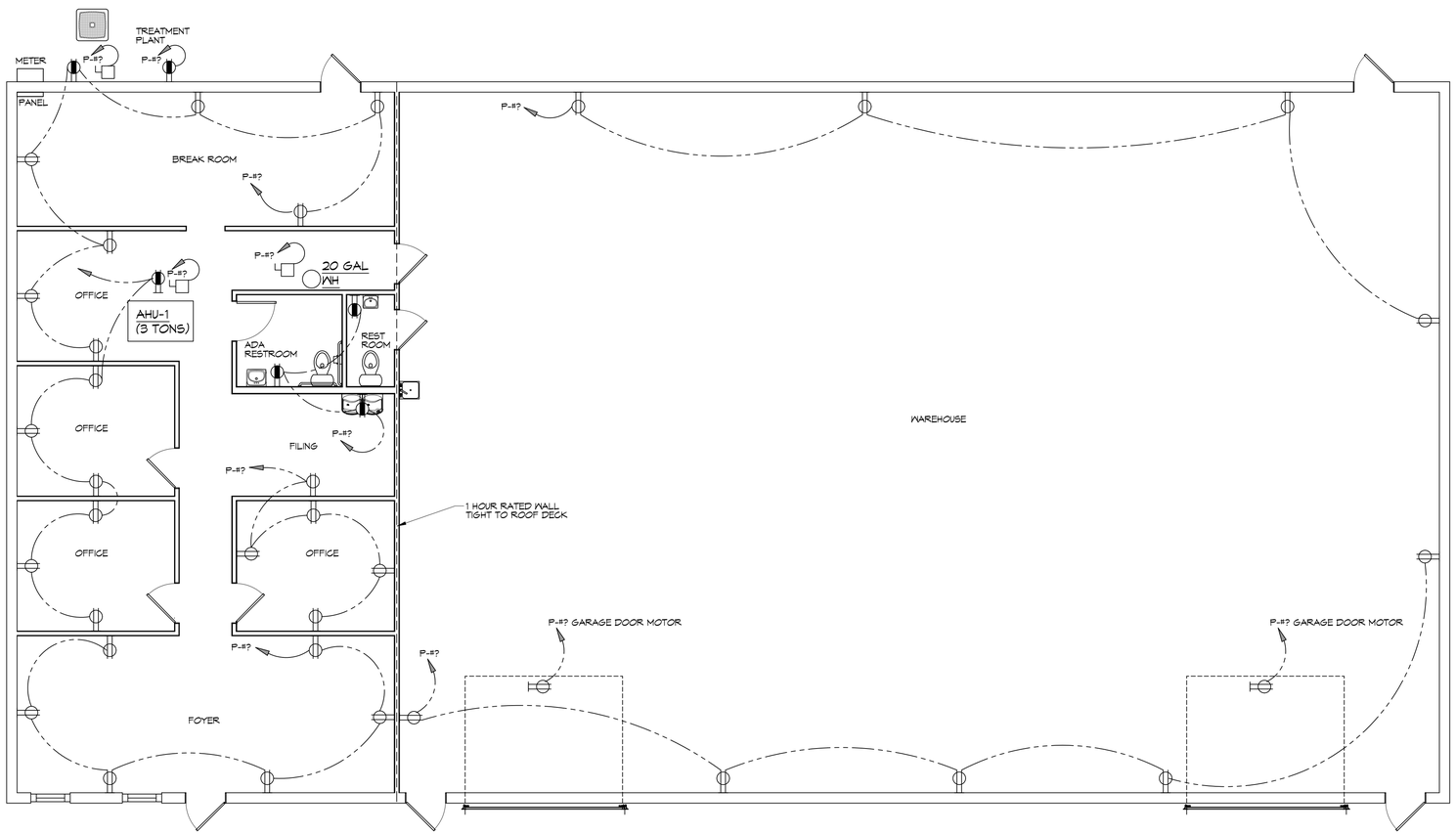

28 POWER PLAN
SCALE: 3/16"=1'0"

GENERAL POWER NOTES

1. ALL WORK SHALL CONFORM TO THE LATEST EDITION OF THE NATIONAL ELECTRICAL CODE, THE GOVERNING ELECTRICAL CODE AND ALL OTHER INSPECTION DEPARTMENTS HAVING JURISDICTION. OBTAIN CERTIFICATES OR APPROVAL WHERE REQUIRED. ELECTRICAL CONTRACTOR SHALL VERIFY ALL WIRE AND CONDUIT SIZES FOR MECHANICAL EQUIPMENT TO BE INSTALLED.
2. ALL MATERIALS FURNISHED SHALL BE NEW AND SHALL BE U.L. LISTED.
3. THE DRAWINGS INDICATE SIZE AND GENERAL LOCATION OF WORK. SCALE DIMENSIONS SHALL NOT BE USED. THE EXACT LOCATION OF ALL LIGHTING FIXTURES, RECEPTACLES AND TELEPHONE OUTLETS, ETC. SHALL BE DETERMINED BY ACTUAL CONDITIONS IN THE FIELD.
4. PRIOR TO BIDDING, CONTRACTOR SHALL VISIT THE JOB SITE AND FAMILIARIZE THEMSELVES WITH THE EXISTING CONDITIONS.
5. ELECTRICAL CONTRACTOR SHALL COORDINATE HIS WORK WITH OTHER TRADES AND WITH OTHER CONTRACTORS WHOSE WORK MAY AFFECT THIS INSTALLATION.
6. ELECTRICAL CONTRACTOR SHALL COORDINATE INCOMING ELECTRICAL SERVICE WITH UTILITY COMPANY AND INCLUDE IN HIS BID ALL CHARGES AND FEES INCURRED IN MODIFICATIONS.
7. ELECTRICAL CONTRACTOR SHALL COORDINATE THE TELEPHONE INSTALLATION WITH THE TELEPHONE COMPANY AND THE GENERAL CONTRACTOR.
8. WHERE MORE THAN ONE SWITCH OCCURS IN THE SAME LOCATION, THEY SHALL BE INSTALLED IN A GANG TYPE BOX UNDER ONE COVER PLATE.
9. ELECTRICAL CONTRACTOR, BEFORE INSTALLING ANY OF THE WORK, SHALL SEE THAT IT DOES NOT INTERFERE WITH CLEARANCES REQUIRED FOR FINISHED COLUMNS, HUNG CEILINGS, PLASTER, PARTITIONS, WALLS, ETC. AS SHOWN IN THE ARCHITECTURAL DRAWINGS AND DETAILS. IF ANY WORK IS INSTALLED AND IT LATER DEVELOPS THAT SUCH DETAILS OR DESIGN CANNOT BE FOLLOWED, THE CONTRACTOR, AT HIS OWN EXPENSE, SHALL MAKE SUCH CHANGES IN THE WORK AS DIRECTED BY THE ARCHITECT, AS WELL AS TO PERMIT THE INSTALLATION OF THE ARCHITECTURAL WORK AS SHOWN ON THE PLANS AND DETAILS.
10. PERFORM TEST REQUIRED BY THE OWNER OR THE ENGINEER IN CONNECTION WITH THE OPERATION OF THE ELECTRICAL SYSTEM IN THE BUILDING. ALL TESTS SHALL BE MADE IN ACCORDANCE WITH THE LATEST STANDARD OF THE IEEE AND THE NATIONAL ELECTRICAL CODE.
11. MINIMUM CONDUCTOR SIZE SHALL BE #12, 600V INSULATION. MINIMUM SIZE CONDUIT SHALL BE 3/4" ELECTRICAL METALLIC TUBING (EMT) FOR INTERIOR USE, AND 3/4" RIGID ALUMINUM FOR EXTERIOR USE. USE NON-METALLIC CABLE (NMC) CABLE COPPER, FOR LIGHTS AND RECEPTACLE CIRCUITS IN WOOD FRAME CONSTRUCTION AREAS ONLY; IN STEEL FRAMING AREAS THE USE OF EMT (MINIMUM) IS REQUIRED; EXTERIOR FITTINGS SHALL BE CAST BOXES AND COVERS. INTERIOR FITTINGS SHALL BE STAMPED BOXES.
12. CONTRACTOR SHALL INSTALL WIRING AND OTHER CIRCUIT COMPONENTS TO MATCH EQUIPMENT ACTUALLY INSTALLED.
13. INSTALL GROUND FAULT RECEPTACLES AT RECEPTACLE LOCATIONS WITHIN 5' OF SINKS OR LAVATORIES, AND AT EXTERIOR LOCATIONS. EXTERIOR RECEPTACLES SHALL ALSO BE WATERPROOF.
14. BONDING AND GROUNDING SHALL BE IN ACCORDANCE WITH NFPA 70:230-63, NFPR 250-23, 250-71 & 250-72.
15. GROUND NEUTRAL IN ACCORDANCE WITH NFPA 70:250-236.
16. FUSES SHALL BE ITT CLASS K5, 250 VOLT, 200,000 AMP INTERRUPTING CAP.
17. PROVIDE SERVICES OF A FIRE/SMOKE DETECTION AND ALARM COMPANY TO DESIGN AND INSTALL ALARM SYSTEM TO MEET REQUIREMENTS OF THE STATE FIRE MARSHALL AND THE FIRE DISTRICT.
18. EXTERIOR LIGHTING SHALL BE SHADED OR INWARDLY DIRECTED IN SUCH A MANNER SO THAT NO DIRECT LIGHTING OR GLARE IS CAST BEYOND THE PROPERTY LINE. THE INTENSITY OF SUCH LIGHTING SHALL NOT EXCEED ONE FOOT CANDLE AS MEASURED AT THE ABUTTING PROPERTY LINE.
19. ALL ELECTRICAL, MECHANICAL AND PLUMBING PENETRATING FIRE PARTITIONS SHALL BE FIRE CAULKED. (PENETRATIONS THROUGH RATED CONSTRUCTION SHALL BE SEALED WITH A MATERIAL CAPABLE OF PREVENTING THE PASSAGE OF FLAMES AND HOT GASES WHEN TESTED IN ACCORDANCE WITH ASTM-E814.)
20. VERIFY ELECTRICAL CONNECTIONS PER MANUFACTURER'S RECOMMENDATIONS.
21. ALL RECEPTACLES AND SWITCHES ARE TO HAVE WEATHER PROOF COVERS IN APPARATUS BAY. 50% OF ALL EXTERIOR WEATHER PROOF COVERS SHALL BE IN-USE COVERS.

LEGEND

SYMB	DESCRIPTION
	STANDARD 120V DUPLEX RECEPTACLE, NEMA 5-2 OR 18" AFF (UNLESS OTHERWISE NOTED)
	SINGLE-POLE DEDICATED RECEPTACLE - REFER TO PANEL SCHEDULE FOR CIRCUIT SIZE
	GFCI DUPLEX RECEPTACLE
	GFCI QUAD RECEPTACLE
	220V ELECTRIC DRYER RECEPTACLE - MOUNTED AT 30" AFF
	220V DEDICATED GFCI RECEPTACLE
	WEATHER-PROOF GFCI DUPLEX RECEPTACLE MOUNTED AT 30" AFF (UNLESS OTHERWISE NOTED)
	STANDARD 120V DUPLEX RECEPTACLE - FLOOR MOUNTED
	STANDARD QUAD RECEPTACLE - WALL-MOUNTED
	STANDARD QUAD RECEPTACLE - FLOOR MOUNTED
	125V 15 AMP DUPLEX-USB 5VDC 3 AMP HUBBELL USB CHARGER RECEPTACLE
	125V 15 AMP QUADPLEX-USB 5VDC 3 AMP HUBBELL USB CHARGER RECEPTACLE
	JUNCTION BOX
	GENERATOR BATTERY CHARGER GFI OUTLET
	2-BUTTON PUSH BUTTON STATION
	COAX-CABLE CONNECTION FOR TELEVISION
	WALL MOUNTED DATA OUTLET
	FLOOR DATA OUTLET
	POWER DISCONNECT
	WATER HEATER ON DECK OR MEZZANINE ABOVE - SIZE AS NOTED ON PLAN
	AIR CONDITIONING AIR HANDLING UNIT ON DECK OR MEZZANINE ABOVE, SEE MECHANICAL DRAWINGS
	AIR CONDITIONING CONDENSER UNIT ON CONCRETE PAD, SEE MECHANICAL DRAWINGS

NOTES:
1. CONNECT ALL EMERGENCY/EXIT LIGHT FIXTURES TO NEAREST CONSTANT POWER SOURCE.
2. CAULK ALL PENETRATIONS WITH FIRE CAULK.

DAMMON ENGINEERING, INC.
LOUISIANA & MISSISSIPPI
www.dammonengineering.com
info@dammonengineering.com
PH: 985.649.5832
Chief Engineer: Brian Mistich, PE
554 Old Spanish Trail
Slidell, LA 70458

#	DESCRIPTION	REVISIONS	DATE

SEAL:

NEW OFFICE WAREHOUSE
LEWIS A/C
3808 COAST BOULEVARD
SLIDELL, LA 70460

DATE:	1-12-2026
CHECKED BY:	CKD
DRAWN BY:	TNT
JOB No:	

All drawings & specifications, designs and arrangements represented thereby are and shall remain the property of Dammon Engineering, and no part thereof shall be copied, disclosed to others, or used in connection with any work or project other than the specific project for which they have been prepared and developed without the written consent of Dammon Engineering. Visual contact with these drawings or specifications shall constitute acceptance of the foregoing restrictions.

SHEET TITLE:
POWER PLAN

DRAWING NUMBER:
E101

SHEET No: 12 of 1

FILE NAME: J:\2- Office Warehouse\Lewis A/C Slidell\Current Drawings\E101 - Electrical Power Plan.dwg PLOT DATE & TIME: Wednesday, January 14, 2026 10:46:53 AM

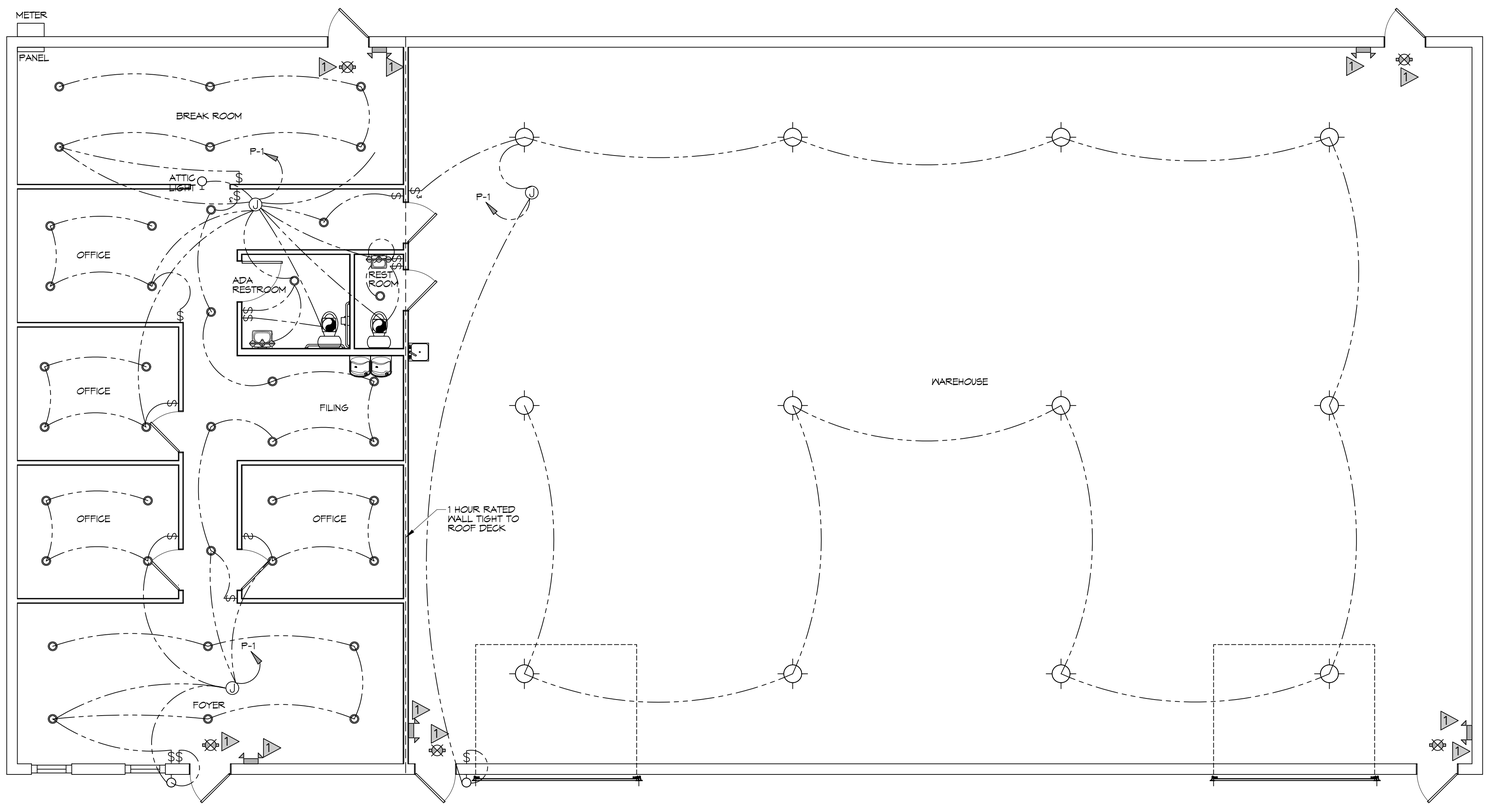

28 LIGHTING PLAN
SCALE: 3/16"=1'0"

GENERAL LIGHTING NOTES

1. ALL WORK SHALL COMPLY WITH APPLICABLE NATIONAL, STATE, AND LOCAL CODES, RULES, REGULATIONS, AND REQUIREMENTS OF THE SERVICE UTILITY COMPANY.
2. GENERAL CONTRACTOR SHALL NOTIFY THE ARCHITECT IMMEDIATELY IF ANY CONFLICTS OCCUR BETWEEN LIGHTING AND ANY OTHER TRADE. DO NOT PROCEED WITH INSTALLATION IN THAT AREA UNTIL CONFLICT HAS BEEN RESOLVED TO THE SATISFACTION OF THE ARCHITECT AND ENGINEER.
3. REFER TO ARCHITECTURAL DRAWINGS FOR EXACT LOCATION AND MOUNTING INSTRUCTIONS FOR ALL LIGHT FIXTURES. NOTIFY THE ARCHITECT AND ENGINEER OF ANY DISCREPANCIES BETWEEN THESE PLANS AND THE ARCHITECTURAL PLANS RELATING TO QUANTITY, TYPE AND LOCATION OF DEVICES AND/OR FIXTURES.
4. WHEN SPECIFIC LIGHT FIXTURE HAS BEEN SPECIFIED IN THE FIXTURE SCHEDULE, ELECTRICAL CONTRACTOR SHALL PROVIDE COMPLETE ASSEMBLY INCLUSIVE ALL PARTS AND HARDWARE TO INSURE PROPER FUNCTIONING FIXTURE.
5. ALL CONDUCTORS SHALL BE A MINIMUM OF #12 AWG UNLESS NOTED OTHERWISE.
6. ALL 120V RUNS LONGER THAN 60 FEET SHALL BE #10 AWG AND 277V RUNS LONGER THAN 150 FEET SHALL BE #10 AWG UNLESS NOTED OTHERWISE.
7. ALL CONDUCTORS SHALL BE COPPER.
8. WHERE CONDUCTOR SIZES ARE NOTED ON DRAWINGS, THAT WIRE SIZE SHALL BE THROUGH THE ENTIRE RUN UNLESS OTHERWISE NOTED.
9. MOUNTED LIGHT SWITCHES 48" AFF UNLESS NOTED OTHERWISE ON ARCHITECTURAL DRAWINGS.
10. WHERE MORE THAN ONE SWITCH OCCURS IN THE SAME LOCATION, THEY SHALL BE INSTALLED IN A GANG TYPE BOX UNDER ONE COVER PLATE. ALL GANGED SWITCHES SHALL HAVE A COMMON SEAMLESS FACEPLATE. EACH MULTI-GANGED BOX SHALL BE NO MORE THAN SIX (6) SWITCHES WIDE. WHERE MORE THAN SIX (6) SWITCHES ARE SHOWN AT ONE (1) LOCATION, ADDITIONAL MULTI-GANGED BOXES SHALL BE STACKED VERTICALLY AND THE WIDTH OF THE MULTI-GANGS SHALL BE AS EVEN AS POSSIBLE.
11. EACH DIMMER SWITCH SHALL HAVE A WATTAGE RATING 25% HIGHER THAN THE TOTAL WATTAGE OF AL LIGHTS TO BE CONTROLLED BY THE DIMMER. DIMMER SIZES 600, 1000, 1500, AND 2000 WATTS, LUTRON NOVA T-STAR. WHERE SWITCHES ARE GANGED WITH DIMMERS, THE SWITCHES SHALL ALSO BE LUTRON NOVA T-STAR. FLUORESCENT AND LOW VOLTAGE DIMMERS SHALL BE LUTRON NOVA T-STAR.
12. ALL EMERGENCY EXIT LIGHT FIXTURES SHALL HAVE 90 MINUTE BATTERY BACKUP WITH INTEGRAL TEST BUTTON AND SHALL BURN CONTINUOUSLY.
13. ALL FLUORESCENT FIXTURES THAT UTILIZE DOUBLE-ENDED LAMPS AND CONTAIN BALLASTS SHALL BE PROVIDED WITH A DISCONNECTING MEANS IN ACCORDANCE WITH NEC 410.73G.

KEYED NOTES

1. PROVIDE CONNECTION TO UN-SWITCHED HOT OF LIGHTING CIRCUIT AND SHALL HAVE 90 MINUTE EMERGENCY BATTERY BACKUP.

THIS WORK SHALL MEET ALL ELECTRICAL CODES

1. 2020 NATIONAL ELECTRICAL CODE
2. NFPA 70
3. 2021 IECC ENERGY CODE

LIGHTING LEGEND

- EXIT LIGHT FIXTURE - CEILING MOUNTED
- EMERGENCY LIGHT - WALL MOUNTED
- VANITY LIGHT
- EXTERIOR WALL MOUNT LIGHT
- JUNCTION BOX
- RECESSED CAN LIGHT
- EXHAUST FAN
- LOW BAY HANGING LED LIGHT

DAMMON ENGINEERING, INC.
LOUISIANA & MISSISSIPPI
www.dammonengineering.com
info@dammonengineering.com
PH: 985.649.5832
Chief Engineer: Brian Mistich, PE
554 Old Spanish Trail
Slidell, LA 70458

#	DESCRIPTION	DATE

REVISIONS

SEAL:

NEW OFFICE WAREHOUSE
LEWIS A/C
381 OR COAST BOULEVARD
SLIDELL, LA 70460

JOB No:		DATE:	1-12-2026
DRAWN BY:	TNT	CHECKED BY:	CKD

This drawing is and shall remain the property of Dammon Engineering, and no part thereof shall be used for any purpose other than the specific project for which it was prepared. Any reproduction, in whole or in part, thereof shall be subject to the prior written consent of Dammon Engineering. Please contact with any questions or concerns.

SHEET TITLE:
LIGHTING PLAN

DRAWING NUMBER:
E102

SHEET No: 12 of 1

FILE NAME: J:_Office Branches\Lake St Slidell\Current Drawings\A102 - Power, Lighting Plan.dwg PLOT DATE & TIME: Wednesday, January 14, 2026 10:46:07 AM

DX SPLIT SYSTEM SCHEDULE

AIR HANDLER											CONDENSER							
TAG	MAKE	MODEL	NOMINAL TONS	TOTAL CFM	Motor HP	ESP (" WC)	HEAT (Kw)	POWER			TAG	NOMINAL TONS	MAKE	MODEL	POWER			REMARKS
								VAC	PH	MCA					VAC	PH	MCA	
AHU-1	Trane	5TEM4D04AC31S	3	1200	1/2	0.4	10.8	208	1	42	CU-1	3	Trane	5TTR5036A1000	208	1	18	1, 2

NOTES:

1 Provide single point power connection, time delay relay, condensate overflow switch & programmable 7/24 thermostat.

2 Cooling capacities to be rated in accordance with AHRI standard 210/290 for ASHRAE standard design weather conditions in New Orleans, LA.

DIFFUSER SCHEDULE

TAG	SERVICE	NECK SIZE	DESCRIPTION
A	Supply Air	Ref. Plan	12"x 12" Adjustable Square Cone Diffuser, Price ASCDA w/ Insulated Back Panel
B	Return Air	Ref. Plan	20" x 20" Perforated Ceiling Return Grille, Price PDR

Notes:

1. Seal around perimeter of diffusers/grilles to prevent moisture migration from attic space
2. Coordinate with owner / architect for color and finish
3. R value of insulated back panels to exceer R-6

Exhaust Fan Schedule

Tag	Fan			Power			Make / Model	Remarks
	Airflow (CFM)	TSP (" wc)	Amps	Volts	Phase	Hz		
EF-1	80	0.2	0.4	120	1	60	Broan A80	1, 2, 3
EF-2	50	0.2	0.2	120	1	60	Broan AE50	1, 2, 3

1. Interlock with light switch
2. Furnish with backdraft damper.
3. Install per Manufacturer's recommendations.

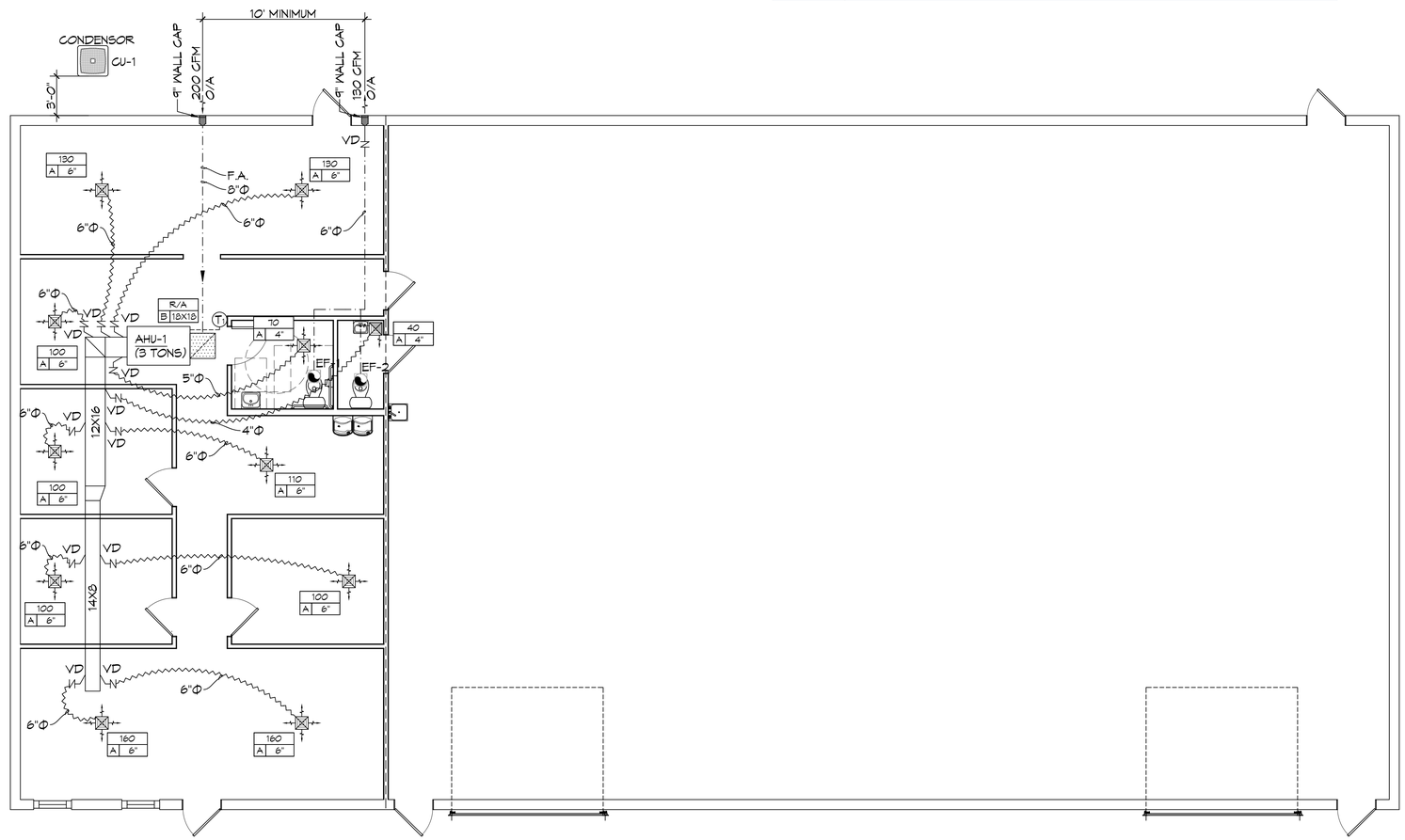

22 WAREHOUSE ADDITION
SCALE: 3/16"=1'-0"

GENERAL HVAC NOTES

1. CONCEALED DUCTWORK TO BE GALVANIZED SHEET METAL WRAPED WITH FIBROUS GLASS DUCT WRAP WITH FSK VAPOR BARRIER, MIN R-6. INSTALLED PER SMACNA STANDARDS. DUCT WORK IMMEDIATELY DOWNSTREAM FROM RTU SHALL BE LINED FOR SOUND ATTENUATION.
2. EXPOSED DUCTWORK TO BE GALVANIZED SHEET METAL LINED WITH FIBROUS GLASS DUCT LINER, MIN R-6. INSTALLED PER SMACNA STANDARDS.
3. ROUND FLEXIBLE DUCT TO BE UL-181, CLASS 1, AIR DUCT MATERIALS.
4. DUCT SIZES SHOWN ARE CLEAR INSIDE DIMENSIONS.
5. IN ALL SYSTEMS OVER 2000 CFM AND LESS THAN 15,000 CFM, SMOKE DETECTORS SHALL BE INSTALLED IN ACCORDANCE WITH NFPA 72E IN THE RETURN DUCT DOWNSTREAM OF THE AIR HANDLING UNIT AND ALL FILTERS TO AUTOMATICALLY STOP THE FAN.
6. PROVIDE UL LISTED 125 °F FIRESTAT IN RETURN AIR OF EACH SYSTEM UNDER 2000 CFM TO SHUT DOWN THE FAN IN THE EVENT OF FIRE.
7. PROVIDE UL RATED FIRE DAMPERS WHERE REQUIRED AT ALL DUCT PENETRATIONS OF FIRE-RATED ASSEMBLIES AND WHERE REQUIRED BY CODE, INCLUDING OUTSIDE AIR INTAKES AND EXHAUST FANS.
8. CONDENSATE DRAINS TO BE PVC PIPE RUN TO PLUMBERS P-TRAP WITHIN FIVE FEET OF AIR HANDLING UNITS.
9. ALL AIR HANDLING SYSTEMS TO BE BALANCED TO ASSURE PROPER AIR FLOWS PER PLANS.
10. ALL THERMOSTATS TO BE AUTOMATIC CHANGEOVER WITH HEAT SWITCH.
11. EXHAUST FAN SHALL BE CONTROLLED BY A SWITCH ON THE WALL IN THE SAME LOCATION AS LIGHT SWITCH(S). PROVIDE BACK DRAFT DAMPER.
12. PROVIDE AND INSTALL WATER PROOF GRILLE VENT IN PROPER ROOF LOCATION FOR PLUMBING FIXTURE EXHAUST.
13. ALL SUPPLY AIR VENTS SHALL BE EQUIPPED WITH AIR CONTROL DAMPERS AT THE REGISTER.
14. LOCATE OUTDOOR UNITS AS SHOWN ON ARCHITECTURAL DRAWINGS.
15. REFRIGERANT LINES SHALL BE SIZED BY UNIT MANUFACTURER AND INSTALLED ACCORDING TO MANUFACTURER'S INSTRUCTIONS.
16. FRESH AIR SHALL BE SUPPLIED TO EACH AIR HANDLER THROUGH EXTERIOR WALL DUCT SUPPLIED WITH A CONTROL DAMPER.
17. ALL ELECTRICAL, MECHANICAL, AND PLUMBING PENETRATING FIRE WALLS SHALL BE FIRE CAULKED. (PENETRATIONS THROUGH RATED CONSTRUCTION SHALL BE SEALED WITH A MATERIAL CAPABLE OF PREVENTING THE PASSAGE OF FLAMES AND HOT GASES WHEN TESTED IN ACCORDANCE WITH ASTM-E8-14).
18. ALL MECHANICAL SYMBOLS ARE DRAWN DIAGRAMMATICALLY, CONTRACTOR TO VERIFY WITH OWNER LOCATIONS OF VENTS, DAMPERS, REGISTERS, ETC.
19. FLEXIBLE DUCTWORK LENGTH NOT TO EXCEED 12'-0". SUPPORT FLEX DUCT TO PREVENT SAGGING
20. REFER TO REFLECTED CEILING PLAN FOR FINAL GRILLE AND DIFFUSER LOCATIONS AND COORDINATE AS REQUIRED.
21. FINAL LOCATION OF TEMPERATURE CONTROLS TO BE COORDINATED WITH OWNER AT JOB SITE.
22. PROVIDE AND INSTALL SMOKE DETECTORS AS APPROVED BY LOCAL AHJS. PLACE NEAR R/A AND S/A OPENINGS OF AHU AND PROVIDE, WITH ACCESS PANEL, WIRING BY ELECTRICAL CONTRACTOR.
23. FRESH AIR INTAKES ARE REQUIRED TO HAVE MOTORIZED OR GRAVITY DAMPERS TO SHUT OFF WHEN SYSTEM IS NOT RUNNING.
24. PROVIDE BIRD SCREENS AT ALL EXTERIOR MECHANICAL PENETRATIONS.
25. COORDINATE WALL MOUNTED THERMOSTAT LOCATIONS WITH ALL OWNER FURNISHED ITEMS EITHER WALL MOUNTED OR FLOOR MOUNTED AGAINST PARTITIONS. REFER TO ARCHITECTURAL DRAWINGS.
26. PROVIDE MIN 18 GA GALVANIZED SHEET METAL TO BLANK-OFF GABLE VENTS WHERE INTAKE/EXHAUST DUCTS OCCUR.

MECHANICAL LEGEND

- 24"X24" 4-WAY SUPPLY AIR GRILLE
- 3-WAY SUPPLY AIR GRILLE
- 2-WAY SUPPLY AIR GRILLE
- FIRE DAMPENER- AT EVERY FIRE RATED WALL
- 12X12 SUPPLY AIR GRILLE
- 24X24 RETURN AIR FILTER GRILLE
- EXHAUST FAN
- THERMOSTAT
- IN LINE EXHAUST FAN WITH MOTOR
- DAMPER CONTROL (V.D)
- ROUND FLEX DUCT, MAX. LENGTH 12'-0", MIN. R-6. DUCT SIZE AS FOLLOWS:
  250 CFM TO 350 CFM = 9"
  200 CFM TO 250 CFM = 8"
  150 CFM TO 200 CFM = 7"
  100 CFM TO 150 CFM = 6
- HVAC SUPPLY DUCT

CFM	
MARK	NECK SIZE

DAMMON ENGINEERING, INC.
LOUISIANA & MISSISSIPPI
www.dammonengineering.com
info@dammonengineering.com
PH: 985.649.5832
Chief Engineer: Brian Mistich, PE
554 Old Spanish Trail
Slidell, LA 70458

#	DESCRIPTION	REVISIONS	DATE

SEAL:

NEW OFFICE WAREHOUSE

LEWIS A/C

39104 COAST BOULEVARD
SLIDELL, LA 70460

JOB No: | DATE: 1-12-2026
DRAWN BY: CKD | CHECKED BY: CKD

This notice shall be part of all contract documents, designs and all other instruments of service, and shall remain the property of Dammon Engineering, and shall not be used, reused and/or copied without written consent of Dammon Engineering. Any use of these documents for purposes other than those for which they were prepared is prohibited. Any modifications to these documents without the written consent of Dammon Engineering, shall release Dammon Engineering from all liability. Those using these documents for purposes other than those for which they were prepared, or those using modified versions of these documents, shall indemnify and hold Dammon Engineering harmless. These contract and/or instrument of service are the property of Dammon Engineering.

SHEET TITLE:
MECHANICAL PLAN

DRAWING NUMBER:

M101

SHEET No: 10 of 1

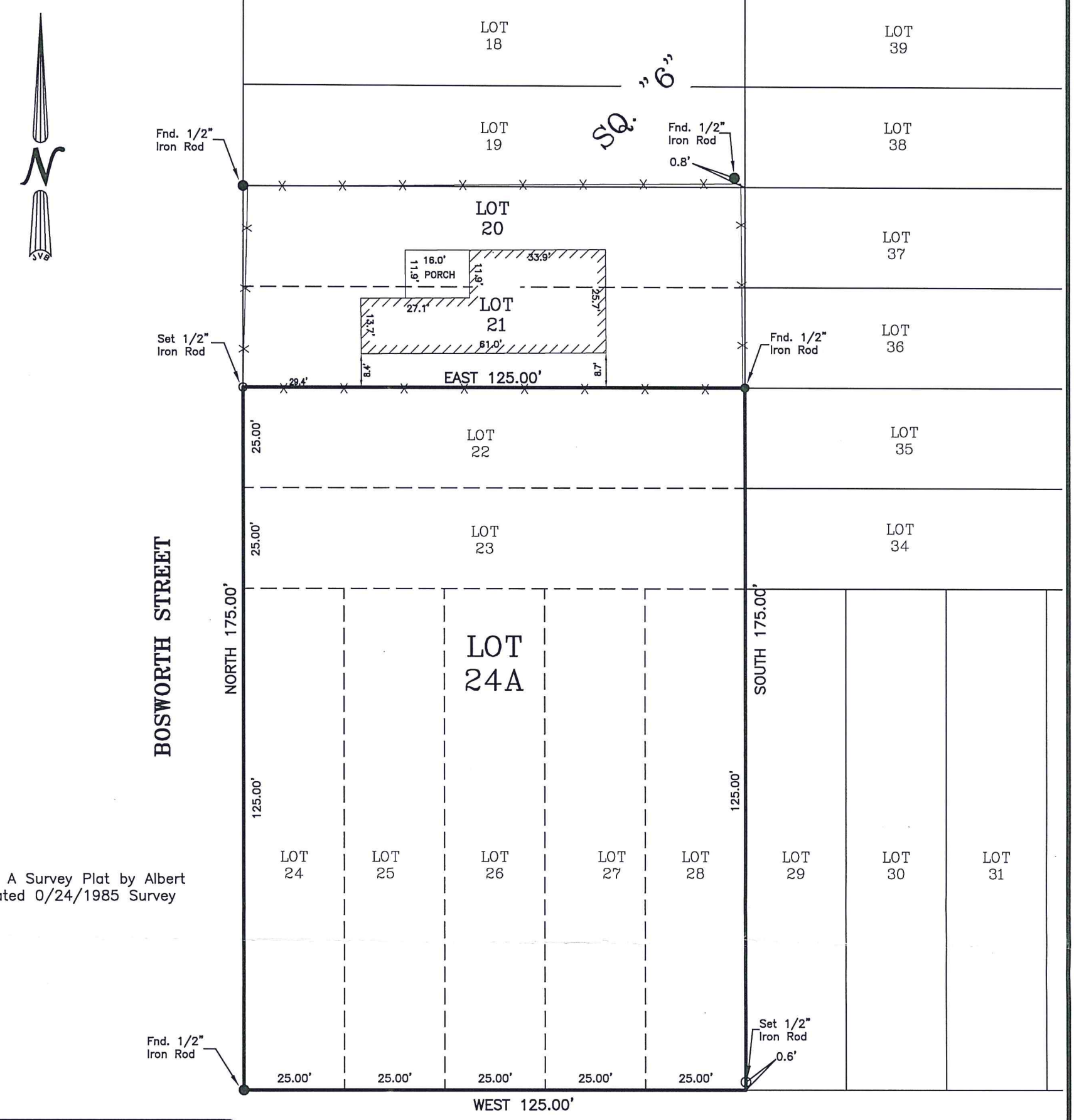

REFERENCE: A Survey Plat by Albert A. Lovell Dated 0/24/1985 Survey # 98340.

COAST BOULEVARD

(60' R/W)

APPROVED:

SECRETARY OF PLANNING COMMISSION — DATE

DIRECTOR OF ENGINEERING — DATE 2/2/24

Monique T Bringol
CLERK OF COURT — DATE

02-14-2024 — DATE FILED

6290A — FILE NO.

TOTAL AREA: 28,125 SQ. FT. OR 0.646 ACRES

Monique T Bringol, Deputy Clerk

ADDRESS: 38109 COAST BOULEVARD

RESTRICTIVE COVENANTS (R/C'S) BY OWNER:
1.) NO ACCESS (NEGATIVE) SERVITUDE ALONG BOSWORTH AVENUE.
2.) IF LOT 24A IS ZONED I-1, THE ONLY PERMITTED USE THEREON SHALL BE OFFICE/WAREHOUSE (INCLUDING HVAC BUSINESS) WITH HEIGHT OF BUILDING NOT TO EXCEED 35'.
3.) R/C'S CAN BE ENFORCED BY ALL ABUTTING PROPERTY OWNERS.
4.) R/C'S CAN ONLY BE AMMENDED BY OWNER AND WITH THE APPROVAL OF ST. TAMMANY PARISH PLANNING COMMISSION.

AIR COMFORT PRODUCTS, INC.

BY: _____
WILFRED E. LEWIS, JR.

DATED: 2-6-2024

GRAPHIC SCALE
30 0 15 30
(IN FEET)
1 INCH = 30 FEET

BUILDING SETBACKS
(* Verify Prior to Construction)
Front Setback.....*
Side Setback.....*
Rear Setback.....*

I CERTIFY THAT THIS PLAT DOES REPRESENT AN ACTUAL GROUND SURVEY AND THAT TO THE BEST OF MY KNOWLEDGE NO ENCROACHMENTS EXIST EITHER WAY ACROSS ANY OF THE PROPERTY LINES, EXCEPT AS SHOWN.

PROPERTY IS SURVEYED IN ACCORDANCE WITH THE LOUISIANA "STANDARDS OF PRACTICE FOR PROPERTY BOUNDARY SURVEYS" FOR A CLASS C SURVEY. BEARINGS ARE BASED ON RECORD BEARINGS UNLESS NOTED OTHERWISE.

ENCUMBRANCES SHOWN HEREON ARE NOT NECESSARILY EXCLUSIVE. ENCUMBRANCES OF RECORD AS SHOWN ON TITLE OPINION OR TITLE POLICY WILL BE ADDED HERETO UPON REQUEST, AS SURVEYOR HAS NOT PERFORMED ANY TITLE SEARCH OR ABSTRACT.

F.I.R.M. No. 225205 0420 E
F.I.R.M. Date 04/21/1999
ZN: A5 B.F.E. 9'
* Verify prior to construction with Local Governing Body.

DRAWING NO. 20230549

DATE: 01/03/2024

J.V. Burkes & Associates, Inc.
SURVEYING ENGINEERING • ENVIRONMENTAL
1805 Shortcut Highway
Slidell, Louisiana 70458
E-mail: jvbassoc@jvburkes.com
Phone: 985-649-0075 Fax: 985-649-0154

DRAWN BY: VLL
CHECKED BY: JDL
SCALE: 1" = 30'

REVISED: 1/16/24 LOT DIMENSIONS
1/18/24 PER PARISH

DECLARATION IS MADE TO ORIGINAL PURCHASER OF THE SURVEY. IT IS NOT TRANSFERABLE TO ADDITIONAL INSTITUTIONS OR SUBSEQUENT OWNERS. SURVEY IS VALID ONLY IF PRINT HAS ORIGINAL SEAL OF SURVEYOR.

A RESUBDIVISION MAP OF LOTS 22 THRU 28, INTO LOT 24A, SQ.6, CENTRAL PARK S/D, SECTION A IN SECTION 23, T-9-S, R-14-E GREENSBURG LAND DISTRICT ST. TAMMANY PARISH, LOUISIANA

CERTIFIED TO: AIR COMFORTS PRODUCTS, INC.

STATE OF LOUISIANA
SEAN M. BURKES
REG. NO. 4785
REGISTERED
LAND SURVEYOR

SURVEYED BY:

SEAN M. BURKES
LA REG. No. 4785

FILE: Q:\!SURVEYING\2023\LOT SURVEY\CENTRAL PARK\20230549, LOTS 22-28, SQ. 6, LEWIS\20230549.dwg