KOHLER®
Roughing-In

K-5056
JARVES™
ENAMELED CAST IRON URINAL

Ordering Information

Accessories/hardware:		
Beehive strainer, tailpiece	K-9161	optional
Cast brass P-trap	K-9000	optional
Washdown pipe, 48”	K-9199	required

Product Information

Included Components:	
Wall hangers (2)	64508

Roughing-In Notes
Fixture dimensions are nominal and conform to tolerances in ASME Standard A112.19.1M.
(T) Drain typically 11-7/8”.

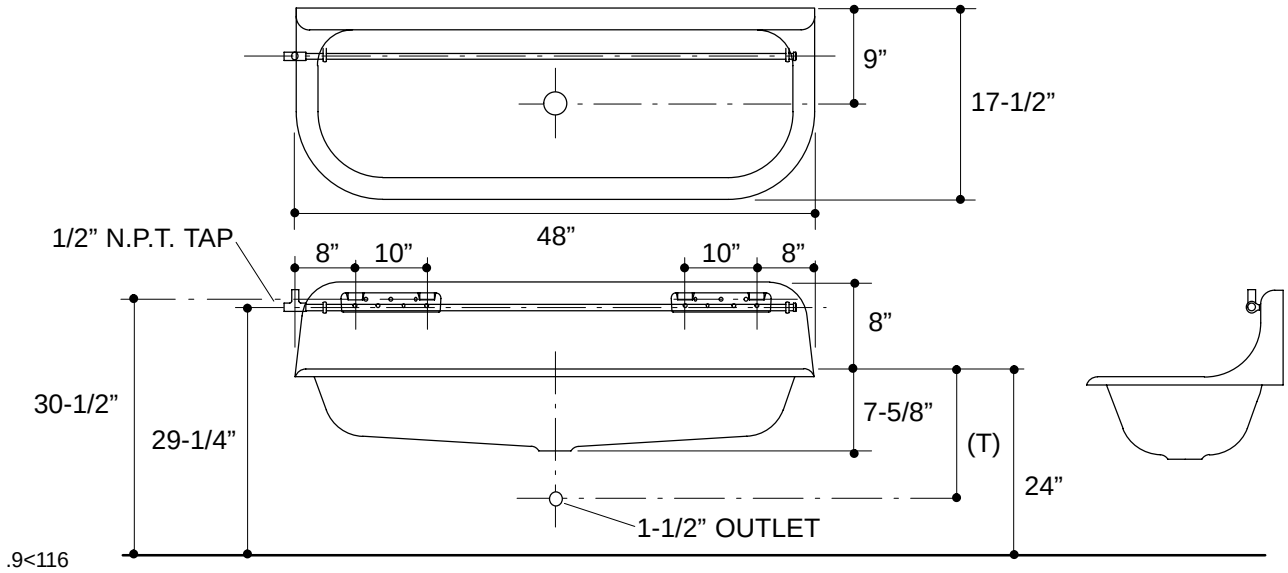

.9<116