KOHLER®
Roughing-In

K-15636
CORALAIS™
CENTERSET LAVATORY FAUCET

Ordering Information

Applicable product:	
Centerset lavatory faucet	K-15636
ADA Lever handle is ADA compliant	

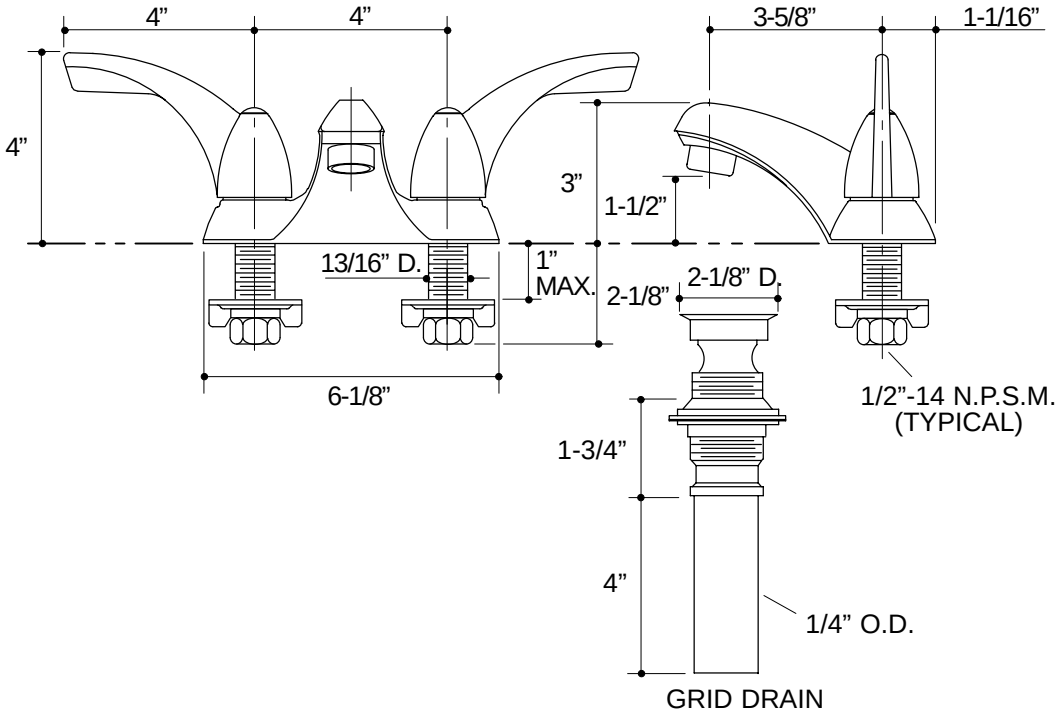

K-15636 Coralais™ Lavatory Faucet
115407-1-**AA** (9619)

KOHLER®

NOTES: