KOHLER® SERVICE PARTS
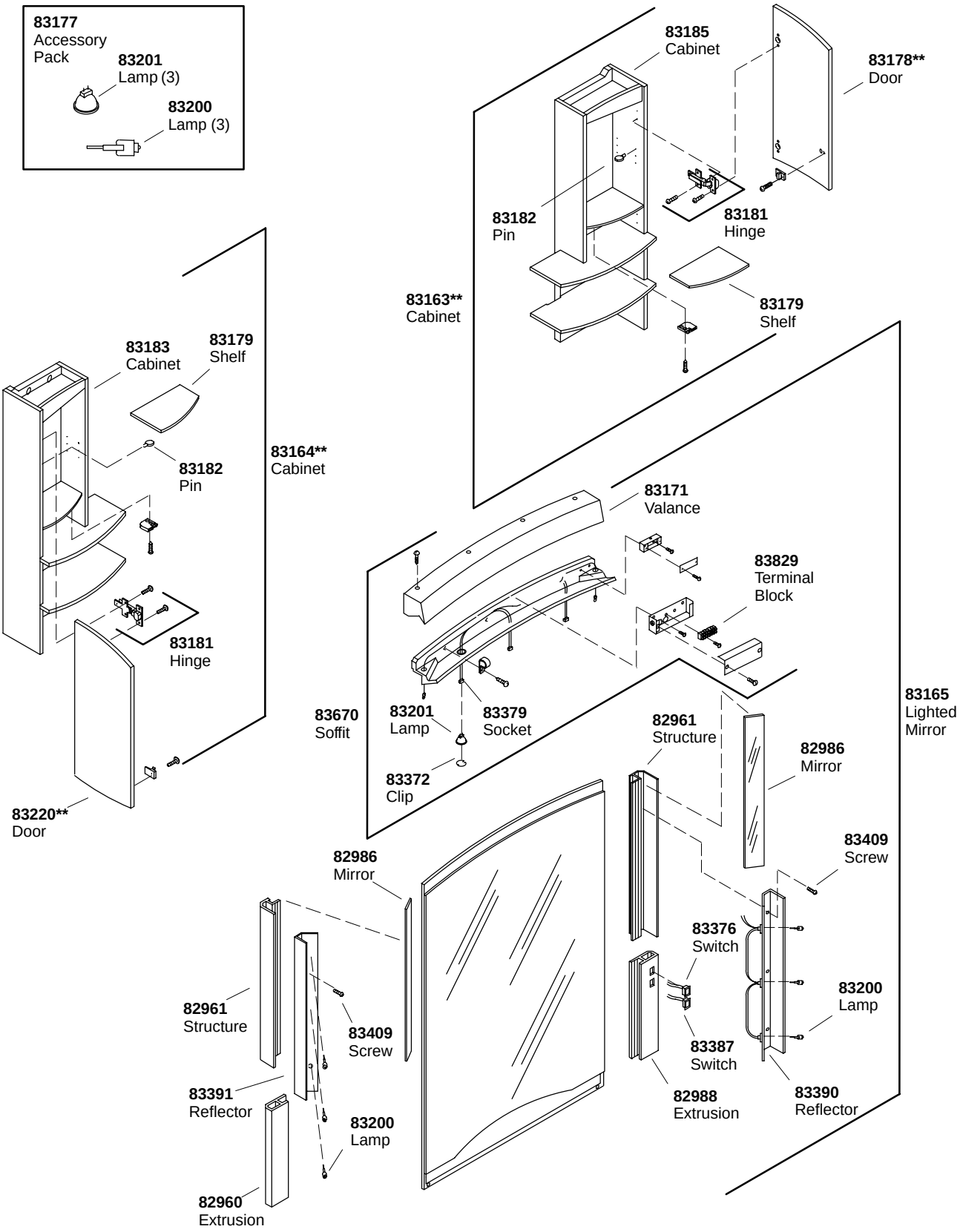
TROCADERO™
LIGHTED MIRROR & CABINETS