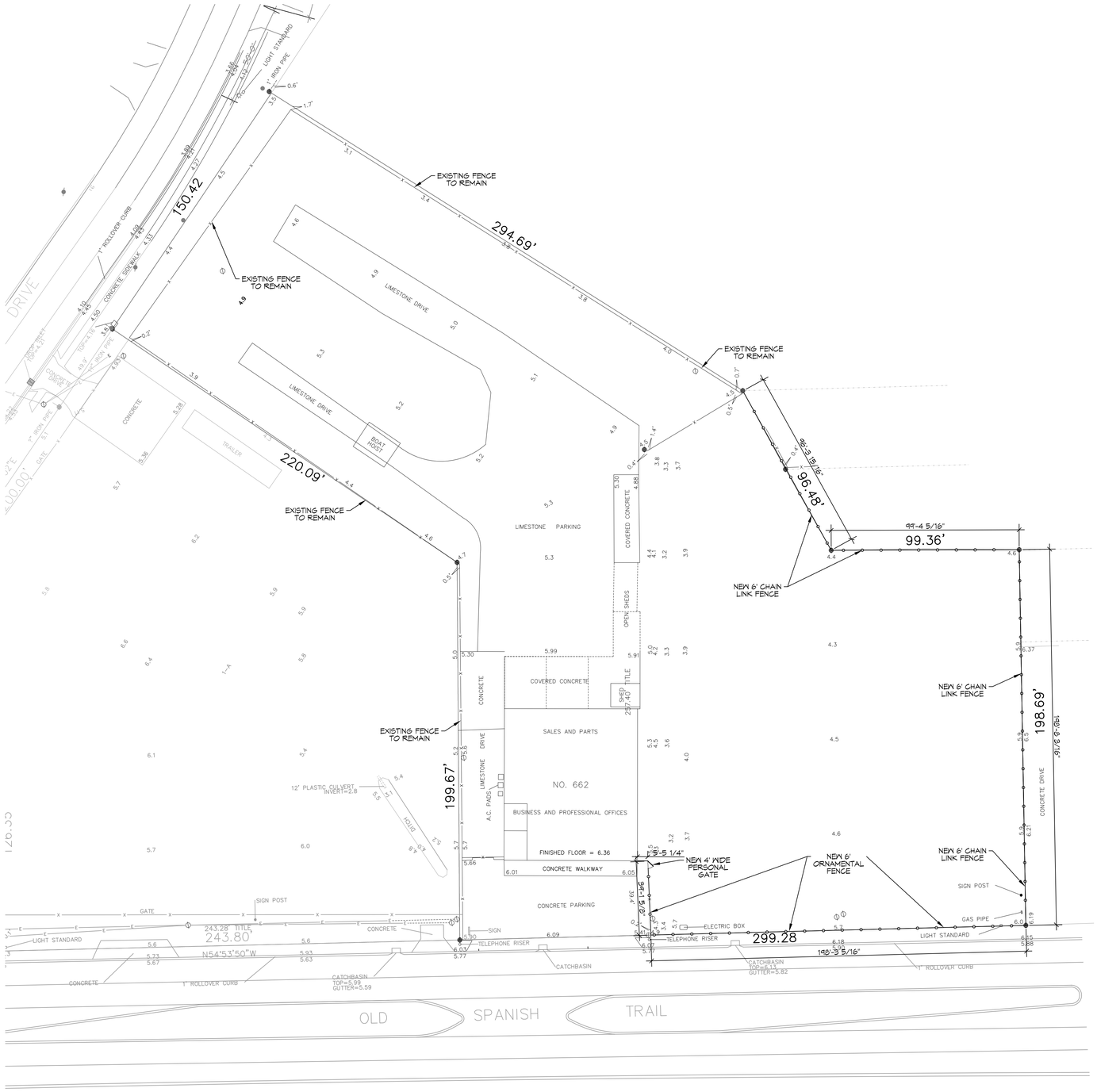

PROPOSED FENCE SITE PLAN

SCALE: 1" = 30'-0"

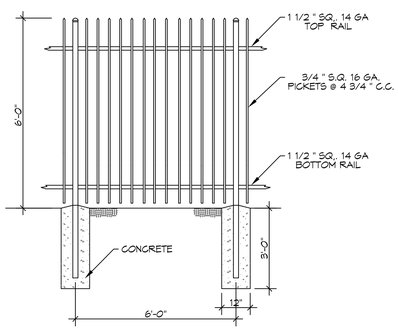

ORNAMENTAL IRON FENCE

SCALE: 3/8" = 1'-0"

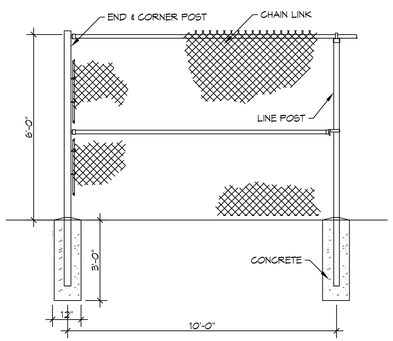

CHAIN LINK FENCE

SCALE: 3/8" = 1'-0"

DAMMON ENGINEERING, INC.
LOUISIANA & MISSISSIPPI
www.dammonengineering.com
info@dammonengineering.com
PH: 985.649.5832
Chief Engineer: Brian Mistich, PE
554 Old Spanish Trail
Slidell, LA 70458

#	DESCRIPTION	DATE

REVISIONS

SEAL:

SITE LAYOUT

BOAT STUFF

662 OLD SPANISH TRAIL
SLIDELL, LA 70458

JOB No:	2026	DATE:	06-04-2026
DRAWN BY:	CKD	CHECKED BY:	JMS

The data shown on such drawings, designs and specifications represents the data as it was when initially prepared for the project of Dammon Engineering, and no part thereof shall be copied, disclosed to others, or used in other projects or for any purpose other than those for which it was prepared and delivered. Any reuse without written verification or adaptation by Dammon Engineering shall be at the sole risk of the user, and the user shall indemnify and hold Dammon Engineering harmless from all claims, damages and expenses arising out of such reuse.

SHEET TITLE:
PROPOSED FENCE SITE PLAN

DRAWING NUMBER:

C101

SHEET No: 1 of 1