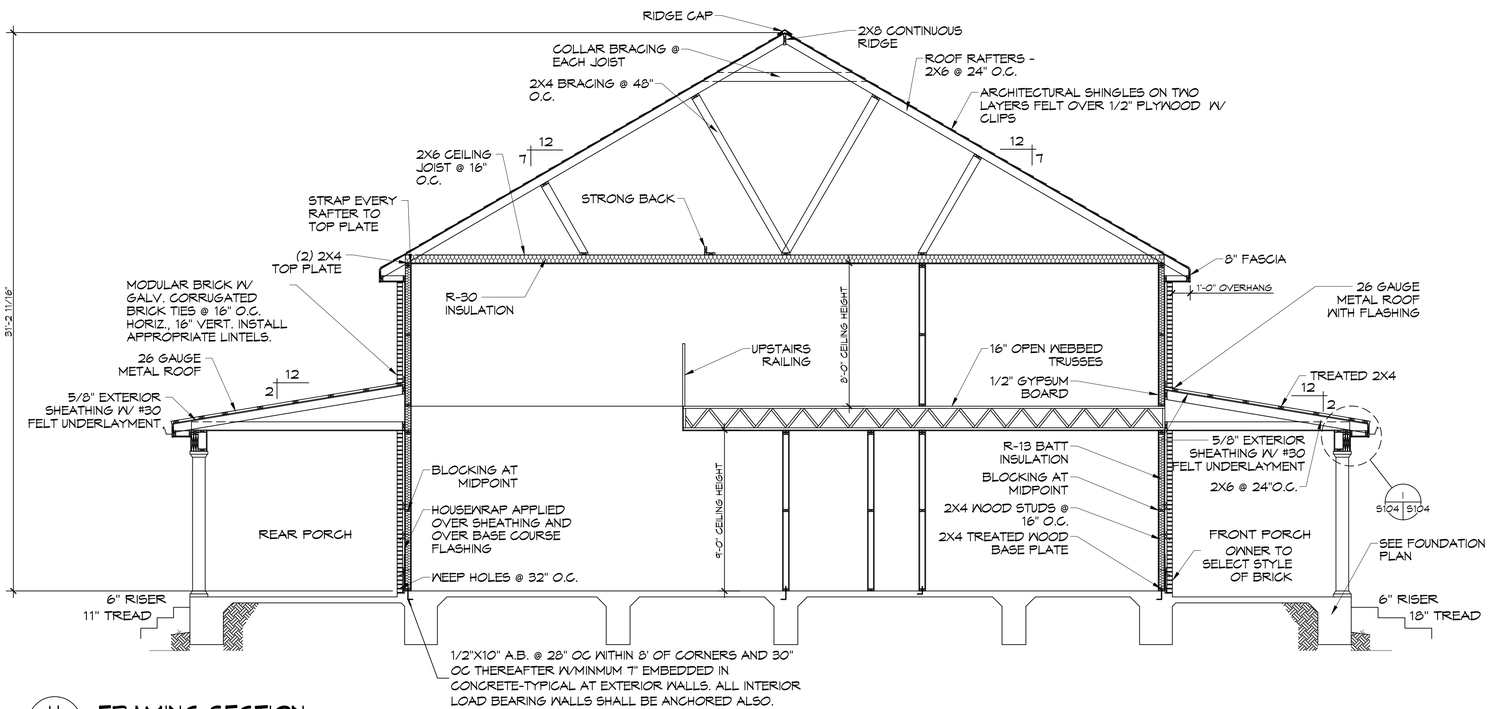

H S104 A101 **FRAMING SECTION**

SCALE: 1/4" = 1'-0"

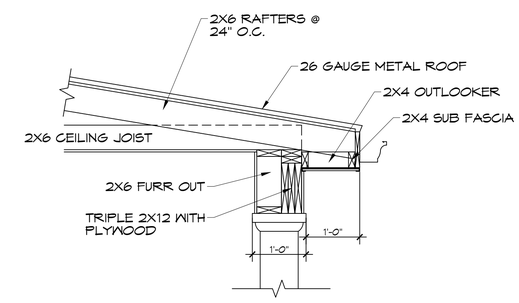

I S104 S104 **FRONT PORCH CORNICE DETAIL**

SCALE: N.T.S

DAMMON ENGINEERING, INC.
LOUISIANA & MISSISSIPPI
www.dammonengineering.com
info@dammonengineering.com
PH: 985.649.5832
Chief Engineer: Brian Mistich, PE
504 Old Spanish Trail
Slidell, LA 70458

REVISIONS

#	DESCRIPTION	DATE

SEAL: STATE OF LOUISIANA — BRIAN A. MISTICH, License No. 30187, PROFESSIONAL ENGINEER

HOUSE PLAN

DARRELL & CHARLETTE JOSEPH

LOT 31
CLABON DRIVE
SLIDELL, LA. 70460

JOB No:	
DATE:	04-05-2024
DRAWN BY:	SCA
CHECKED BY:	CKD

SHEET TITLE: FRAMING SECTION

DRAWING NUMBER: S104

SHEET No: 6 of 13

The plans, specifications, and designs contained herein are the property of Dammon Engineering, Inc. and are protected under the copyright laws of the United States. Any unauthorized use, reproduction, or distribution of these documents or any portion thereof, without the express written consent of Dammon Engineering, Inc. is strictly prohibited. Violators will be prosecuted to the fullest extent of the law. Unauthorized use of these documents may violate applicable laws and regulations governing professional practice in the state where the project is located. For a period of two years from the date of publication, Dammon Engineering, Inc. has been prepared and authorized to provide copies of these documents to the owner of the project for reviewing purposes and for the construction of the project. For a period of two years from the date of publication, Dammon Engineering, Inc. has been prepared and authorized to provide copies of these documents to the contractor of the project for reviewing purposes and for the construction of the project.