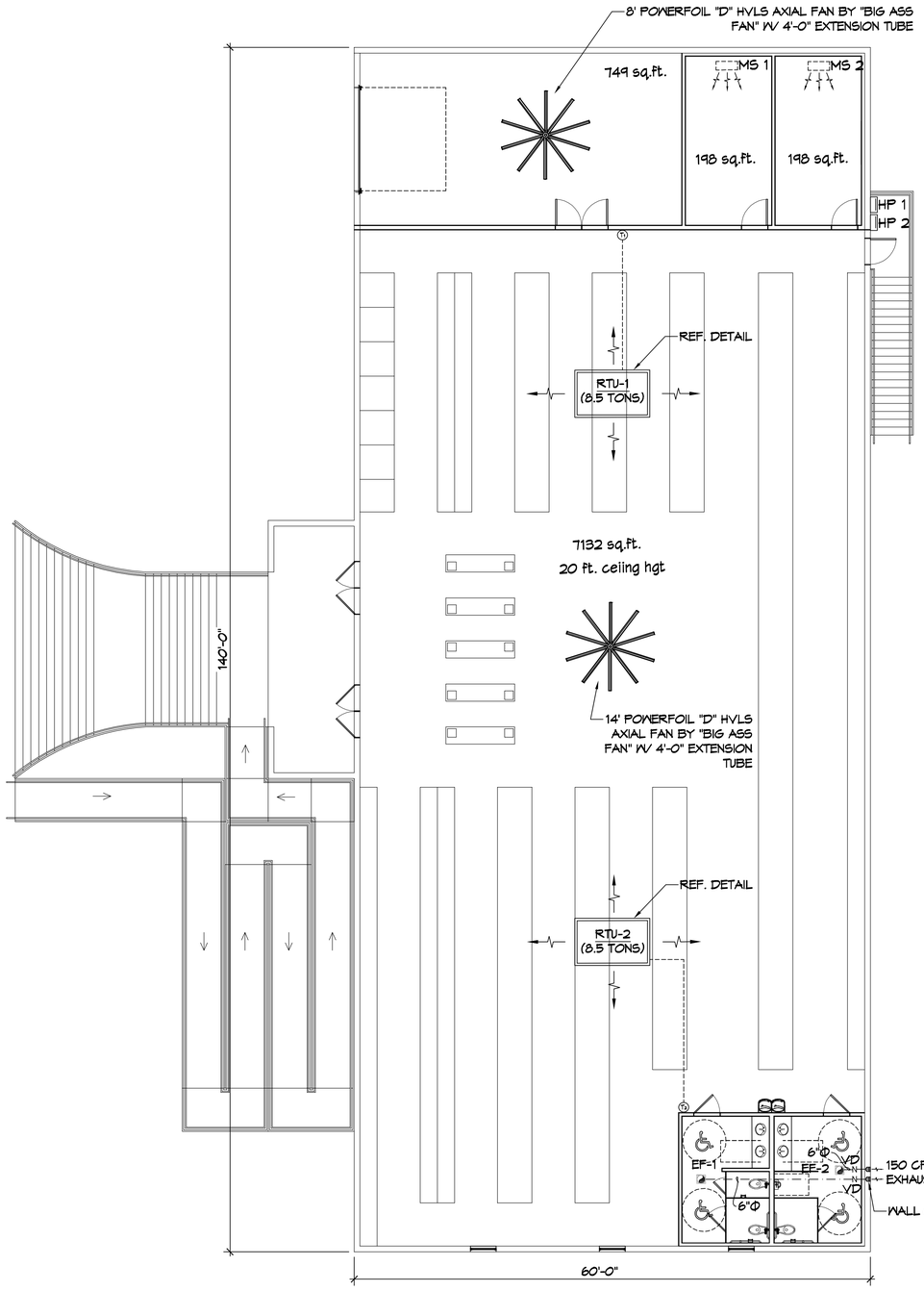

24 MECHANICAL PLAN

SCALE: 1/8"=1'-0"

ROOFTOP SCHEDULE

TAG	Make / Model	Tons	TOTAL CFM	VENTILATION AIR (CFM)	REQ'D COOLING TMBH	REQ'D COOLING SMBH	HEAT kW	Motor HP	ESP (" WC)	POWER VAC	POWER HZ	POWER PH	MCA	REMARKS
RTU-1	TSC102-H3E	8.5	2720	730	94.7	55.4	13.5	2	0.4	230	60	3	56	1, 2
RTU-2	TSC102-H3E	8.5	2720	730	94.7	55.4	13.5	2	0.4	230	60	3	56	1, 2

NOTES:
1. Install units per Manufacturer's recommendations, local codes and regulations.
2. Furnish smoke detectors in accordance with NFPA.

MIN-SPLIT SCHEDULE

AIR HANDLER Tag	Make	Model	Cooling (MBH)	Heating (BTUH)	Power VAC	Power PH	Remarks	HEAT PUMP Tag	Make/Model	Model	Power VAC	Power PH	MCA	Remarks
MS-1	Daikin	FTB12AXVJU	11	11.3	208	1	1, 2 ,3	HP-2	Daikin	RXB12AXVJU	208	1	7.7 (System)	1
MS-2	Daikin	FTB12AXVJU	11	11.3	208	1	1, 2 ,3	HP-2	Daikin	RXB12AXVJU	208	1	7.7 (System)	1

Exhaust Fan Schedule

Tag	Fan Airflow (CFM)	Fan TSP (" wc)	Fan Amps	Fan RPM	Power Volts	Power Phase	Power Hz	Make / Model	Remarks
EF-1	150	0.2	0.31	925	120	1	60	Panasonic FV-1115VQ1	1, 2
EF-2	150	0.2	0.31	925	120	1	60	Panasonic FV-1115VQ1	1, 2

1. Install per Manufacturer's recommendations.
2. Furnish with grille, speed control and backdraft damper.

MECHANICAL SCHEDULES

SCALE: 1/4"=1'-0"

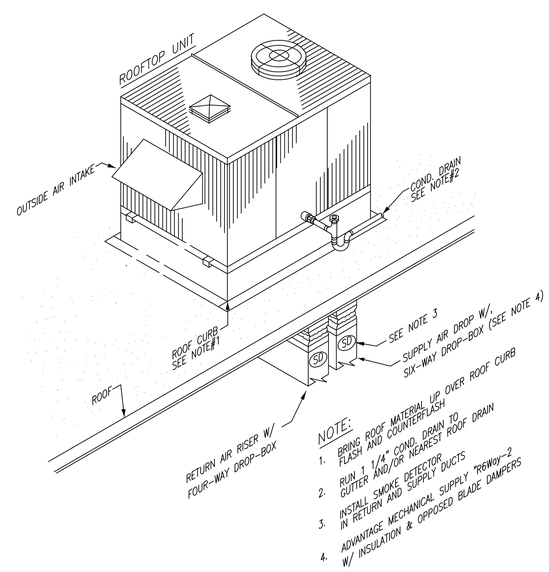

MD 142 TYPICAL ROOFTOP INSTALLATION

NOT TO SCALE

GENERAL HVAC NOTES

1. CONCEALED DUCTWORK TO BE GALVANIZED SHEET METAL WRAPED WITH FIBROUS GLASS DUCT WRAP WITH FSK VAPOR BARRIER, MIN R-6. INSTALLED PER SMACNA STANDARDS. DUCT WORK IMMEDIATELY DOWNSTREAM FROM RTU SHALL BE LINED FOR SOUND ATTENUATION.
2. EXPOSED DUCTWORK TO BE GALVANIZED SHEET METAL LINED WITH FIBROUS GLASS DUCT LINER, MIN R-6. INSTALLED PER SMACNA STANDARDS.
3. ROUND FLEXIBLE DUCT TO BE UL-181, CLASS 1, AIR DUCT MATERIALS.
4. DUCT SIZES SHOWN ARE CLEAR INSIDE DIMENSIONS.
5. IN ALL SYSTEMS OVER 2000 CFM AND LESS THAN 15,000 CFM, SMOKE DETECTORS SHALL BE INSTALLED IN ACCORDANCE WITH NFPA 72E IN THE RETURN DUCT DOWNSTREAM OF THE AIR HANDLING UNIT AND ALL FILTERS TO AUTOMATICALLY STOP THE FAN.
6. PROVIDE UL LISTED 125 °F FIRESTAT IN RETURN AIR OF EACH SYSTEM UNDER 2000 CFM TO SHUT DOWN THE FAN IN THE EVENT OF FIRE.
7. PROVIDE UL RATED FIRE DAMPERS WHERE REQUIRED AT ALL DUCT PENETRATIONS OF FIRE-RATED ASSEMBLIES AND WHERE REQUIRED BY CODE, INCLUDING OUTSIDE AIR INTAKES AND EXHAUST FANS.
8. CONDENSATE DRAINS TO BE PVC PIPE RUN TO PLUMBERS P-TRAP WITHIN FIVE FEET OF AIR HANDLING UNITS.
9. ALL AIR HANDLING SYSTEMS TO BE BALANCED TO ASSURE PROPER AIR FLOWS PER PLANS.
10. ALL THERMOSTATS TO BE AUTOMATIC CHANGEOVER WITH HEAT SWITCH.
11. EXHAUST FAN SHALL BE CONTROLLED BY A SWITCH ON THE WALL IN THE SAME LOCATION AS LIGHT SWITCH(S). PROVIDE BACK DRAFT DAMPER.
12. PROVIDE AND INSTALL WATER PROOF GRILLE VENT IN PROPER ROOF LOCATION FOR PLUMBING FIXTURE EXHAUST.
13. ALL SUPPLY AIR VENTS SHALL BE EQUIPPED WITH AIR CONTROL DAMPERS AT THE REGISTER.
14. LOCATE OUTDOOR UNITS AS SHOWN ON ARCHITECTURAL DRAWINGS.
15. REFRIGERANT LINES SHALL BE SIZED BY UNIT MANUFACTURER AND INSTALLED ACCORDING TO MANUFACTURER'S INSTRUCTIONS.
16. FRESH AIR SHALL BE SUPPLIED TO EACH AIR HANDLER THROUGH EXTERIOR WALL DUCT SUPPLIED WITH A CONTROL DAMPER.
17. ALL ELECTRICAL, MECHANICAL, AND PLUMBING PENETRATING FIRE WALLS SHALL BE FIRE CAULKED. (PENETRATIONS THROUGH RATED CONSTRUCTION SHALL BE SEALED WITH A MATERIAL CAPABLE OF PREVENTING THE PASSAGE OF FLAMES AND HOT GASES WHEN TESTED IN ACCORDANCE WITH ASTM-E8-14).
18. ALL MECHANICAL SYMBOLS ARE DRAWN DIAGRAMMATICALLY, CONTRACTOR TO VERIFY WITH OWNER LOCATIONS OF VENTS, DAMPERS, REGISTERS, ETC.
19. FLEXIBLE DUCTWORK LENGTH NOT TO EXCEED 12'-0". SUPPORT FLEX DUCT TO PREVENT SAGGING
20. REFER TO REFLECTED CEILING PLAN FOR FINAL GRILLE AND DIFFUSER LOCATIONS AND COORDINATE AS REQUIRED.
21. FINAL LOCATION OF TEMPERATURE CONTROLS TO BE COORDINATED WITH OWNER AT JOB SITE.
22. PROVIDE AND INSTALL SMOKE DETECTORS AS APPROVED BY LOCAL AHJS. PLACE NEAR R/A AND S/A OPENINGS OF AHU AND PROVIDE, WITH ACCESS PANEL, WIRING BY ELECTRICAL CONTRACTOR.
23. FRESH AIR INTAKES ARE REQUIRED TO HAVE MOTORIZED OR GRAVITY DAMPERS TO SHUT OFF WHEN SYSTEM IS NOT RUNNING.
24. PROVIDE BIRD SCREENS AT ALL EXTERIOR MECHANICAL PENETRATIONS.
25. COORDINATE WALL MOUNTED THERMOSTAT LOCATIONS WITH ALL OWNER FURNISHED ITEMS EITHER WALL MOUNTED OR FLOOR MOUNTED AGAINST PARTITIONS. REFER TO ARCHITECTURAL DRAWINGS.
26. SEE ROOF PLAN FOR ALL ROOF PENETRATIONS.
27. PROVIDE MIN 18 GA GALVANIZED SHEET METAL TO BLANK-OFF GABLE VENTS WHERE INTAKE/EXHAUST DUCTS OCCUR.

MECHANICAL LEGEND

- 24"X24" 4-WAY SUPPLY AIR GRILLE
- 3-WAY SUPPLY AIR GRILLE
- 2-WAY SUPPLY AIR GRILLE
- FIRE DAMPENER- AT EVERY FIRE RATED WALL
- ROUND FLEX DUCT, MAX. LENGTH 12'-0", MIN. R-6. DUCT SIZE AS FOLLOWS:
  250 CFM TO 350 CFM = 9"
  200 CFM TO 250 CFM = 8"
  150 CFM TO 200 CFM = 7"
  100 CFM TO 150 CFM = 6
- HVAC SUPPLY DUCT
- 12X12 SUPPLY AIR GRILLE
- 24X24 RETURN AIR FILTER GRILLE
- EXHAUST FAN
- THERMOSTAT
- IN LINE EXHAUST FAN WITH MOTOR
- DAMPER CONTROL (V.D)

CFM	
MARK	NECK SIZE

DAMMON ENGINEERING, INC.
LOUISIANA & MISSISSIPPI
www.dammoneng.engineering.com
info@dammoneng.engineering.com
PH: 985.649.5832
Chief Engineer: Brian Mistich, PE
554 Old Spanish Trail
Slidell, LA 70458

#	DESCRIPTION	DATE
	REVISIONS	

SEAL:

NEW BUILDING

LOCO JO FIREWORKS

1284 EAST HOYZE BEACH ROAD
SLIDELL, LA 70452

DATE: 10-28-2025
JOB No:
CHECKED BY: BAM
DRAWN BY: CKD

The drawings and specifications contained herein are the property of Dammon Engineering and are considered instruments of service. Any and all rights in the property of Dammon Engineering, shall be given thereof and the owner of record, for which the have been prepared and developed without written consent of Dammon Engineering. Visual contact with these drawings or specifications shall constitute conclusive evidence of acceptance of these restrictions. © 2025 DAMMON ENGINEERING

SHEET TITLE:
MECHANICAL PLAN

DRAWING NUMBER:

M101

SHEET No: 15 of 3