KOHLER®
SERVICE PARTS

SINGLE — 3/8” ANGLE SUPPLIES WITH STOPS AND ANNEALED VERTICAL TUBE

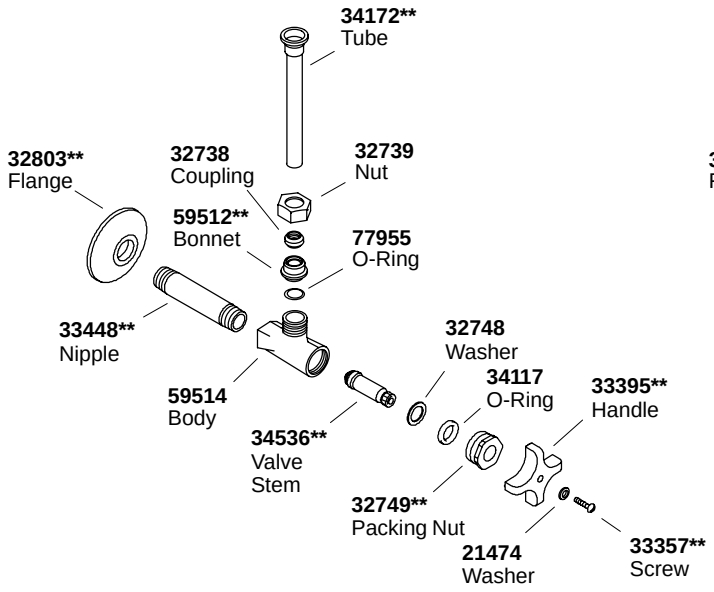

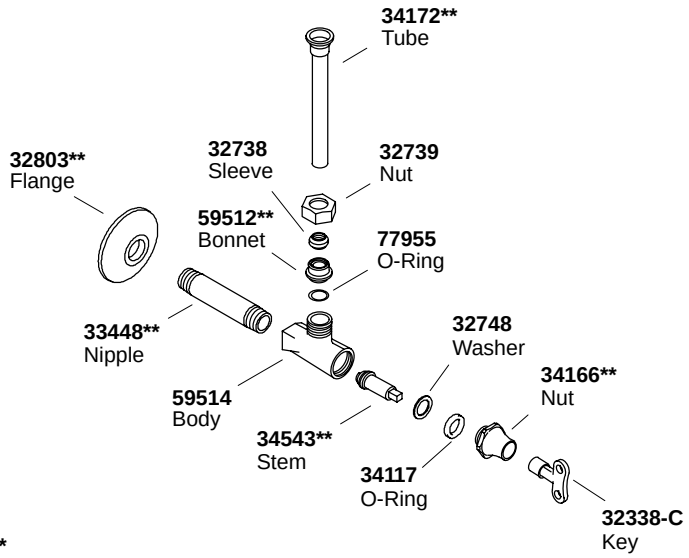

****Finish/color code must be specified when ordering.**