KOHLER®
SERVICE PARTS

TOILET AND BIDET FITTINGS

K-8240 TABORET BIDET FITTING

ORDER BY KIT NUMBER OR PART NUMBER, NOT ITEM NUMBER OR KIT LETTER.

Ordering Options

Item	Part No. or Kit
1	A or B
2	A or B, C
3, 4	A or B
5	J
6	43416‡
7	D
8	E or F
9	G, H
10, 11	H
12	500276‡
13	42160
14, 15	30072‡
16	*
17	500317‡
18	I

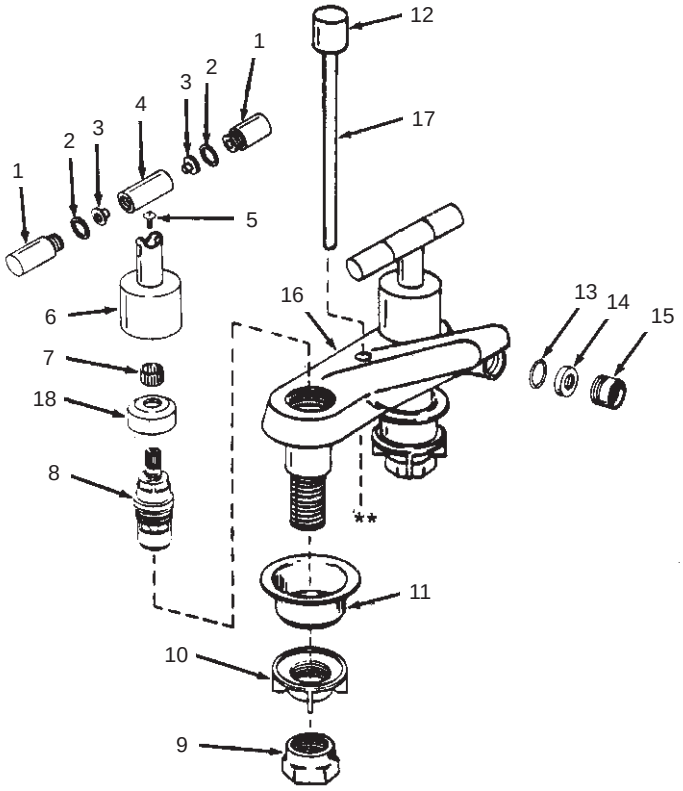

Kit Ordering Information

Kit	Kit Part No.	Kit Name	Kit Contents
A	43411 ‡	Handle Trim Kit (Metal Finish)	2 ea., Items 1 and 3; 4 ea., Item 2; 1 ea., Item 4
B	43412 ‡	Handle Trim Kit (Clear Finish)	2 ea., Items 1 and 3; 4 ea., Item 2; 1 ea., Item 4
C	43414	Index Ring Kit	2 ea., Hot, 2 ea., Cold; Item 2
D	43417	Spline Adapter Kit	2 ea., Item 7
E	30430	Ceramic Cartridge (Closes Clockwise)	1 ea., Item 8
F	30431	Ceramic Cartridge (Closes Counterclockwise)	1 ea., Item 8
G	30230	Coupling Nut Kit	2 ea., Item 9
H	30227	Mounting Hardware Kit	2 ea., Items 9, 10, and 11
I	500253	Stabilizer Kit	2 ea., Item 18
J	43415	Screw Kit	2 ea., Item 5

KITS MAY INCLUDE EXTRA PARTS

NOTES:

* Not available as a service part.

** For pop-up drain, see K-7701.

LEGEND:

‡ Specify Finish.

KOHLER CO., KOHLER, WISCONSIN 53044