KOHLER®
Roughing-In

K-377
FINIAL TRADITIONAL KITCHEN SINK FAUCET

Ordering Information

Applicable faucet:	
Lever handles with biscuit accents	K-377-4F
Lever handles with polished finish accents	K-377-4M
Lever handles with white accents	K-377-4P
ADA Lever handles are ADA compliant	

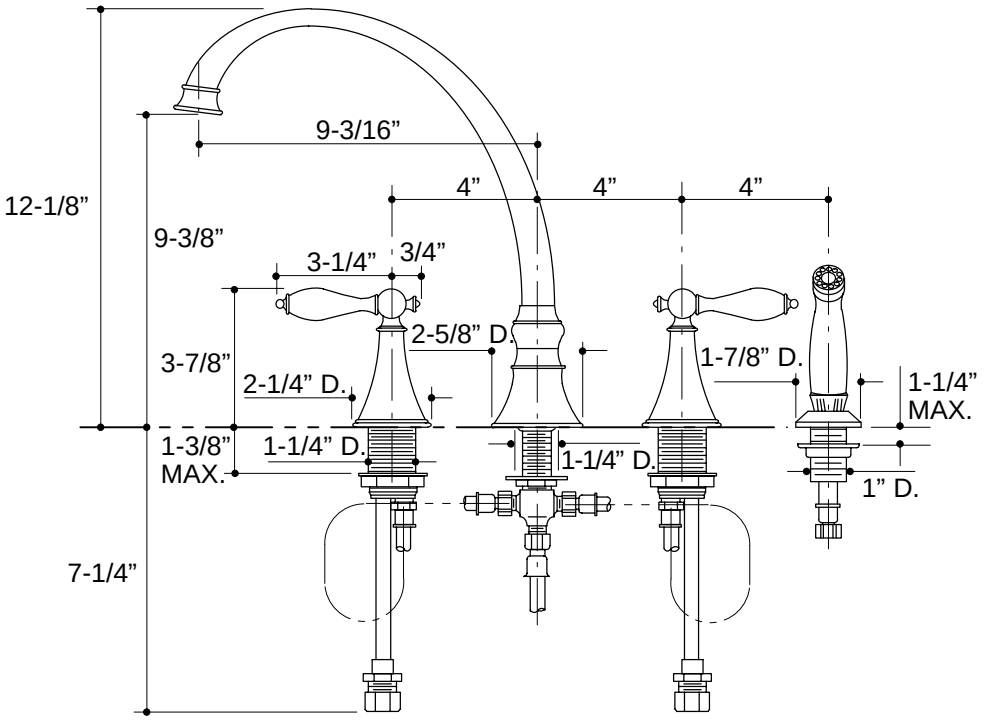

316

K-377 Finial Traditional Kitchen Sink Faucet
115908-1-**AA** (A)

KOHLER®

NOTES: