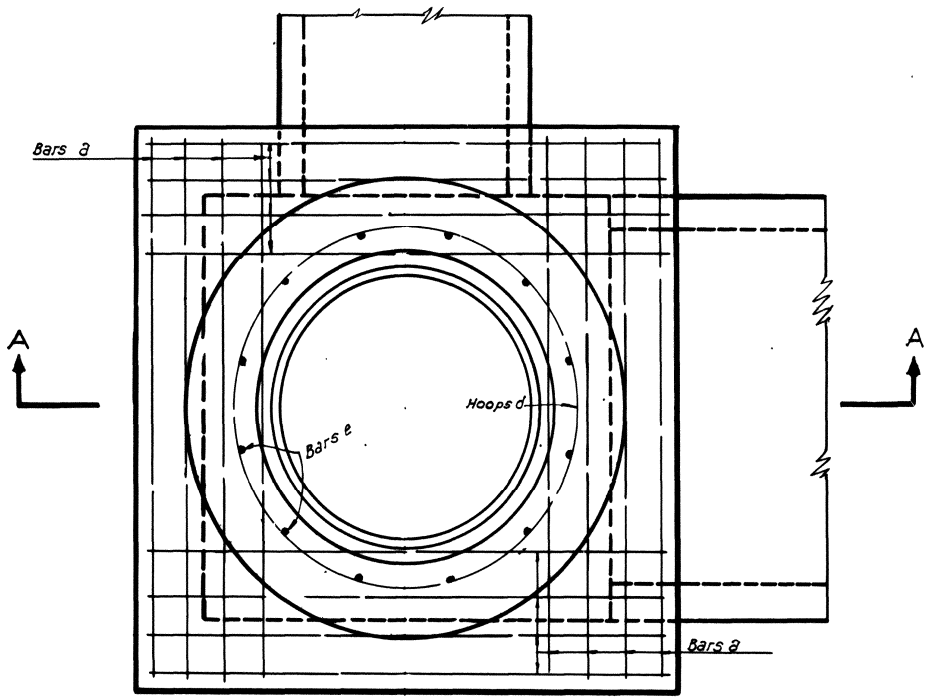

PLAN SHOWING REINFORCING IN TOP OF MANHOLE

PAVEMENT NOT SHOWN

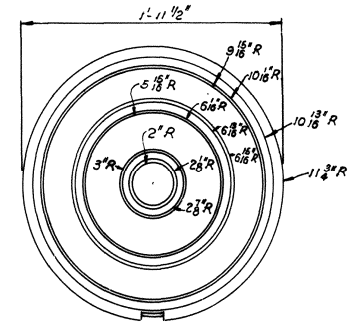

PLAN OF BOTTOM OF COVER

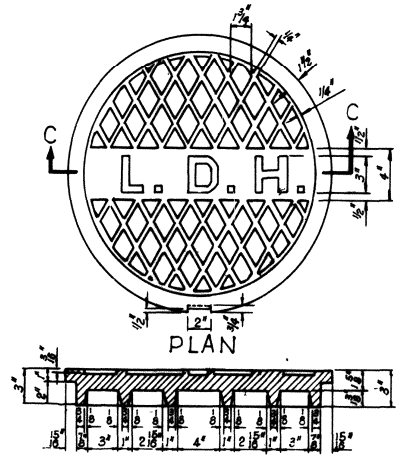

DETAILS OF C.I. COVER

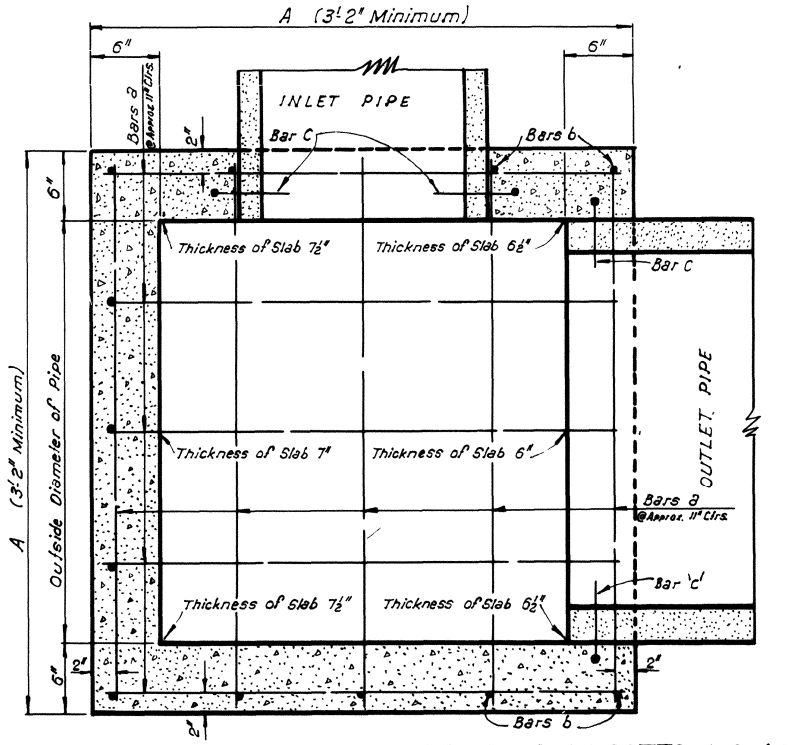

SECTION SHOWING REINFORCING IN BOTTOM SLAB

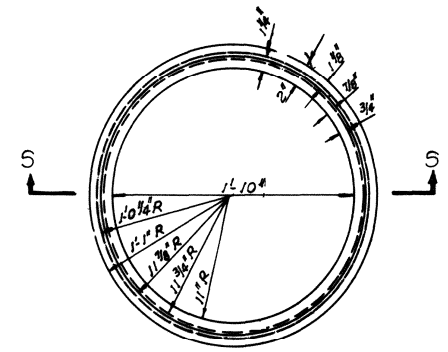

PLAN OF C.I. COVER SEAT

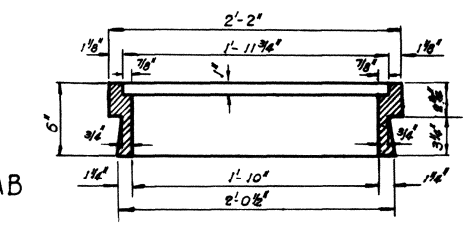

SECTION S-S

DETAILS OF C.I. COVER SEAT

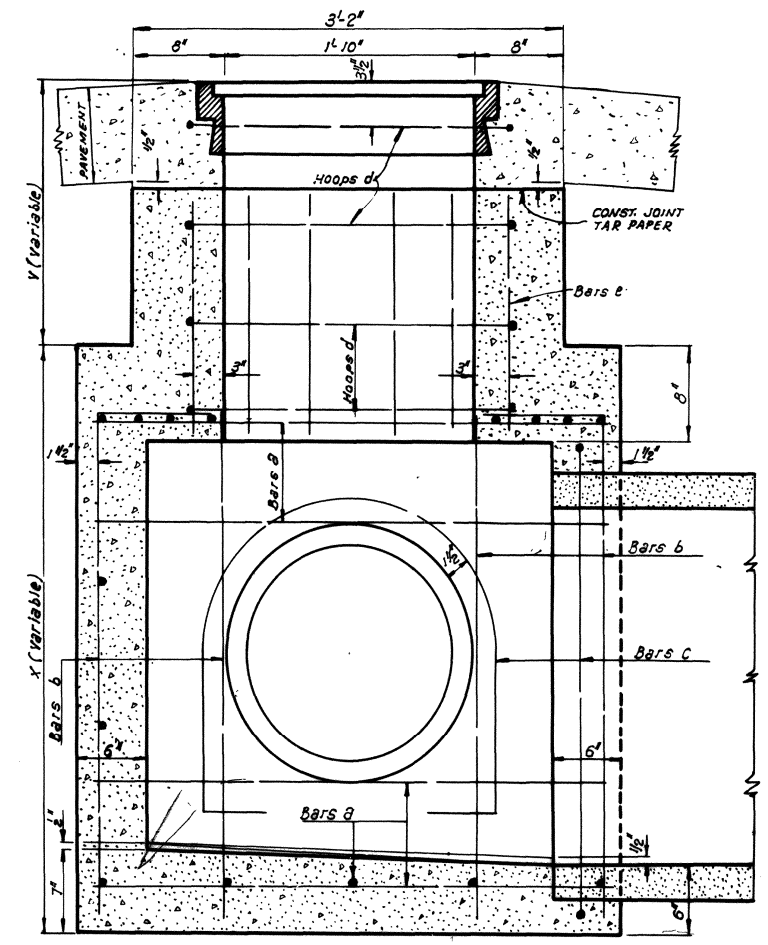

SECTION A-A

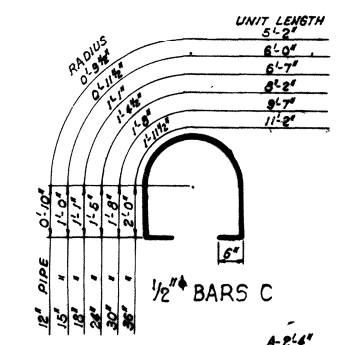

½"ϕ BARS C

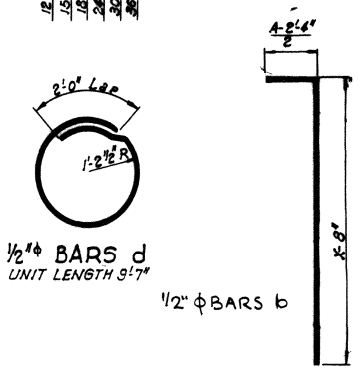

½"ϕ BARS d

UNIT LENGTH 9'-7"

½" ϕ BARS b

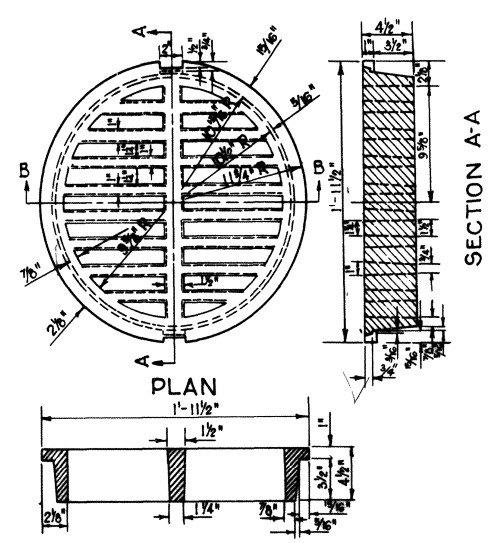

DETAILS OF (H20-44) C.I. GRATE-TYPE COVER

APPROX. WEIGHT 250 LBS.

NOTE: TO BE USED ONLY WHEN CALLED FOR ON PLANS

BILL OF MATERIALS FOR ONE MANHOLE — X = 4'-2" (AS DETAILED)

MARK	SIZE	SPACING	NO. REQUIRED	UNIT LENGTH	LOCATION
Bars a	½"ϕ	Approx. 11"	10	A - 3"	Longitudinal and Transverse in Bottom Slab
" a	"	" 11"	Depending on No. & Size of Pipes	A - 3"	" " " " Walls of Box
" a	"	3"	" " " " "	A - 3"	" " " " Top Slab of Box
" b	"	Approx. 11"	" " " " " " "	See Bending Diagram	Vertical in Walls of Box
Hoops c	"		1 each Pipe	" " "	Around each Pipe as Shown
" d	"	9" Max.	$\frac{V+3"}{9"}+1$	9'-7"	Hoops in Walls of Cylinder
Bars e	"	30° Radius	12	V + 4½" - Pvt. Thickness	Vertical in Walls of Cylinder
1 Cast Iron Cover Seat Weighing Approximately 161 Lbs.					
1 Cast Iron Cover Weighing Approximately 203 Lbs					

Note: The Contractor will not pour above the bottom of the Slab until the paving adjacent to the Basin has been completed.

Approved by

Original Signed by Chief Engineer

Chief Engineer — Date

R-CB-11

STANDARD PLAN
R.C. MANHOLE
36" MAXIMUM PIPE CONNECTION

Date: Dec. 1940

STATE OF LOUISIANA
DEPARTMENT OF HIGHWAYS

Date	Description	By
4-6-76	Note on Pouring Sequence	W.T.J.
5-2-51	½" Bars changed to ⅝" ϕ	W.O.W.
8-8-51	C.I. GRATE-TYPE COVER ADDED	W.O.W.
8-13-61	HEIGHT OF CYLINDRICAL WALL AND SEAT	O.A.M.

REVISIONS

DESIGNED O.A. Hester	DETAILED O.A. Hester	TRACED [illegible]
CHECKED [illegible]	CHECKED [illegible]	CHECKED [illegible]
IN CHARGE OF		HEAD ROAD [illegible]

R-CB-11