	STATE PROJECT	PARISH	SHEET NO.

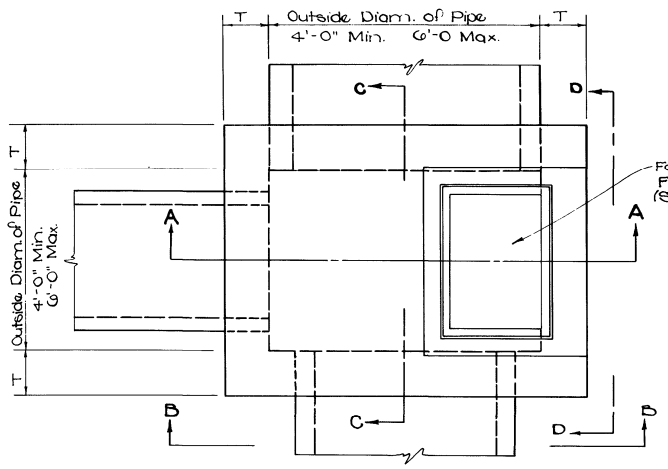

PLAN

Showing Frame

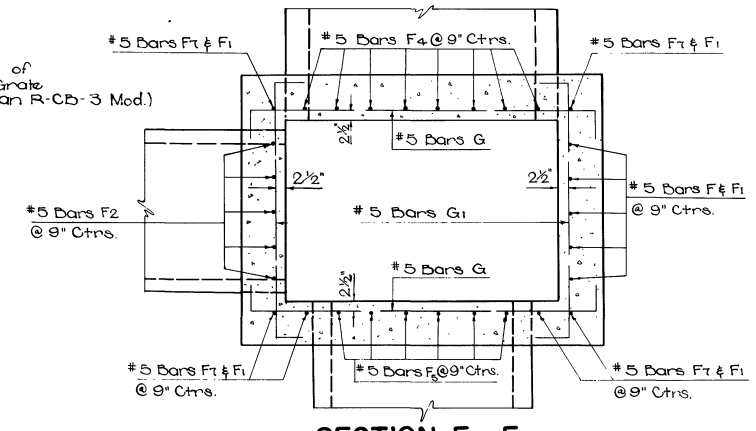

SECTION E - E

Bot. Slab Reinforcing not Shown

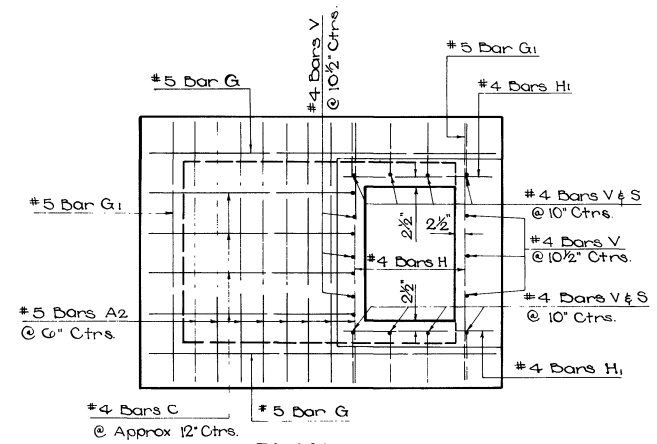

PLAN

Showing Reinforcing in Top Slab, Frame and Grate not Shown; See Std. Plan R-CB-3 Mod.)

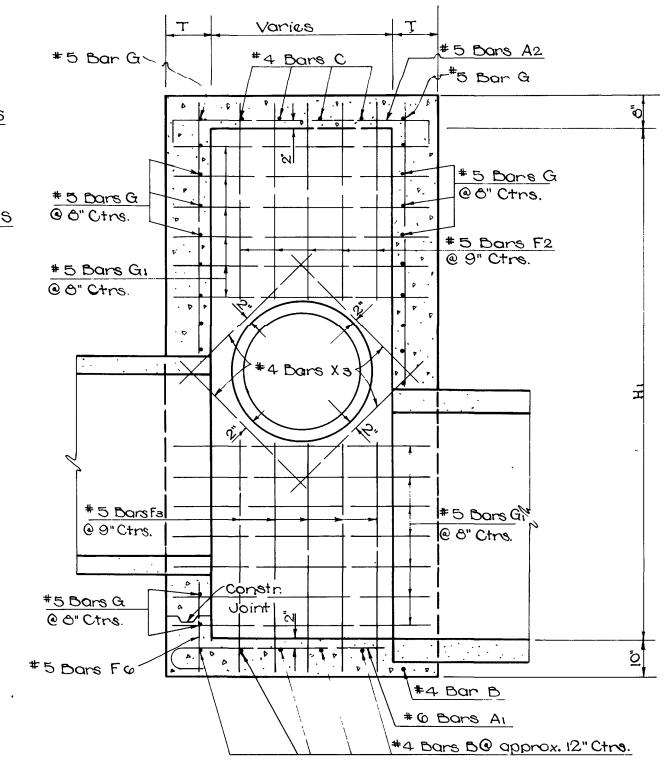

SECTION C - C

** For Approved Manhole Steps, See L. D. H. Qualified Products List.

* E Dimension is Embedment of Manhole Steps. To be as Specified on L. D. H. Qualified Products List.

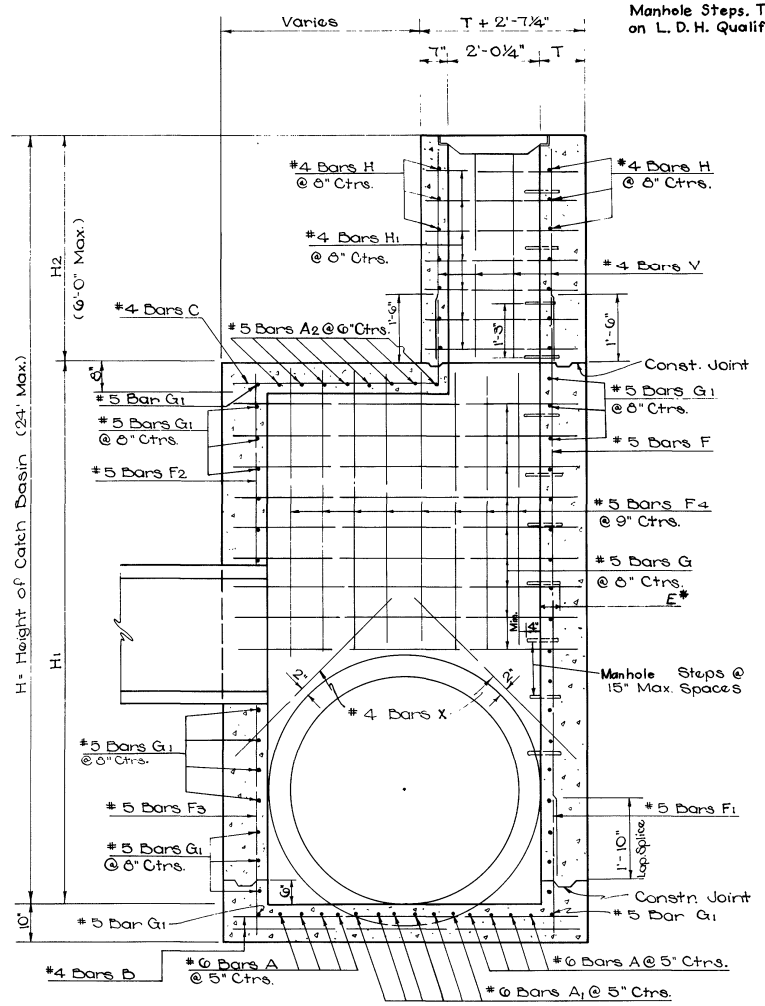

SECTION A - A

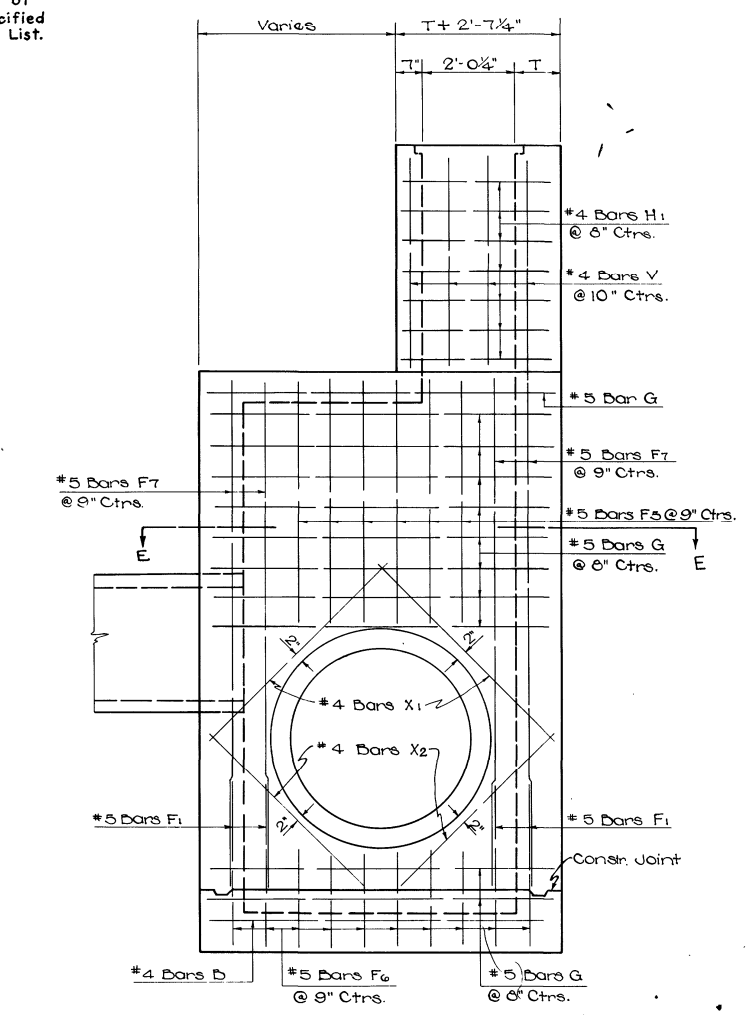

ELEVATION B - B

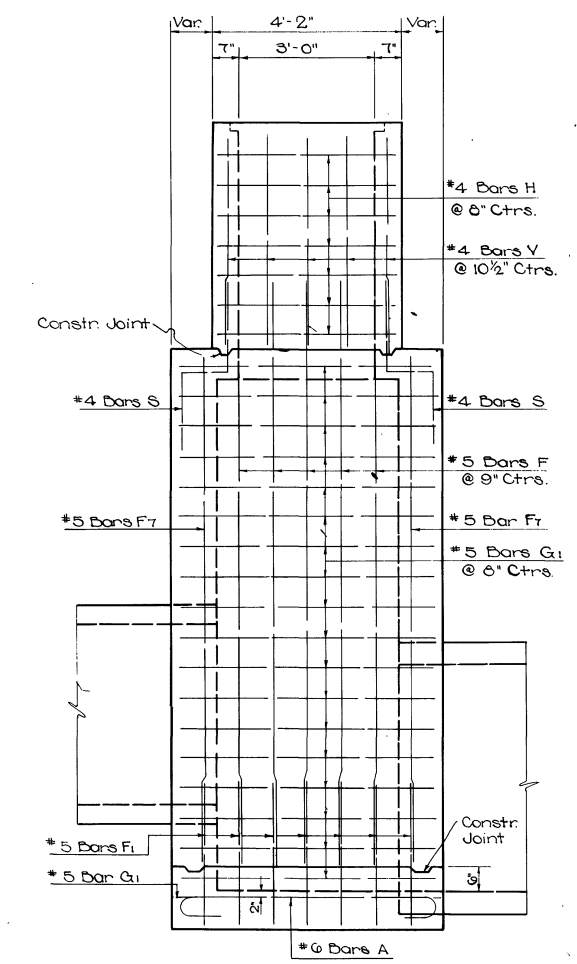

ELEVATION D - D

DIMENSIONS	
H	T
12'-9" to 16'-0"	10"
16'-1" to 24'-0"	12"

Note:
The Contractor will not pour above the bottom of the Slab until the paving adjacent to the Basin has been completed.

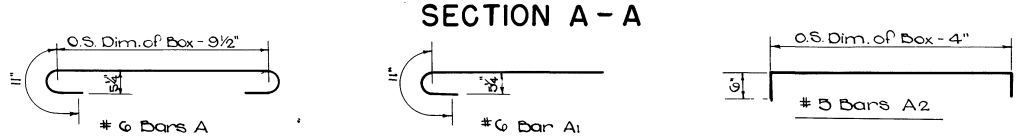

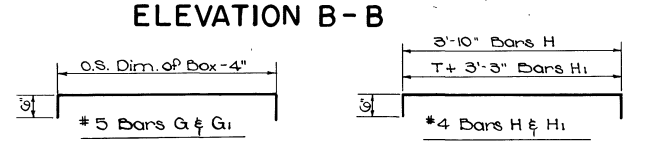

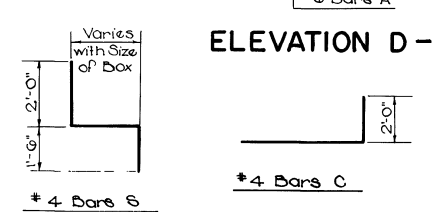

R-CB-38

To be Used in Conjunction with Std. Plan R-CB-3 Mod.

STANDARD PLAN

OPEN - TOP R.C. CATCH BASIN FOR 60" MAX. PIPES

DATED Jan. 1966

DATE	DESCRIPTION	BY
5-3-76	M.H. Steps	W.T.J.
4-6-76	Note on Paving Sequence	W.T.J.
11-18-71	Revised Grate Type	W.E.M.
6-64	Retraced	W.E.M.

REVISIONS

STATE OF LOUISIANA
DEPARTMENT OF HIGHWAYS

DESIGNED	DETAILED G.A. Hester	TRACED J. Read
CHECKED	CHECKED W.E. Marcum	CHECKED
IN CHARGE OF		

R-CB-38