KOHLER®
Roughing-In

K-5910
BON VIVANT®
ENAMELED CAST IRON FLAT-RIM SINK

Ordering Information

Applicable product:		
Six-hole sink	K-5910-6	shown
Accessories/hardware:		
Hardwood cutting board	K-6509	optional
Wire rinse basket	K-6520	optional
Alterna faucet	K-6972-CV	recommended
Flair faucet	K-7773-7A	recommended
Soap dispenser	K-9611	recommended
Hot water dispenser	K-9607-R	recommended

Product Information

Fixture*:		basin area	water depth
Sink		432 x 457mm	235mm
Disposal		203 x 305mm	114mm
Outlet	∅92mm		
Faucet holes	∅35mm		
* Approximate measurements for comparison only.			

Installation Notes

Refer to installation instructions included with fixture before beginning installation.

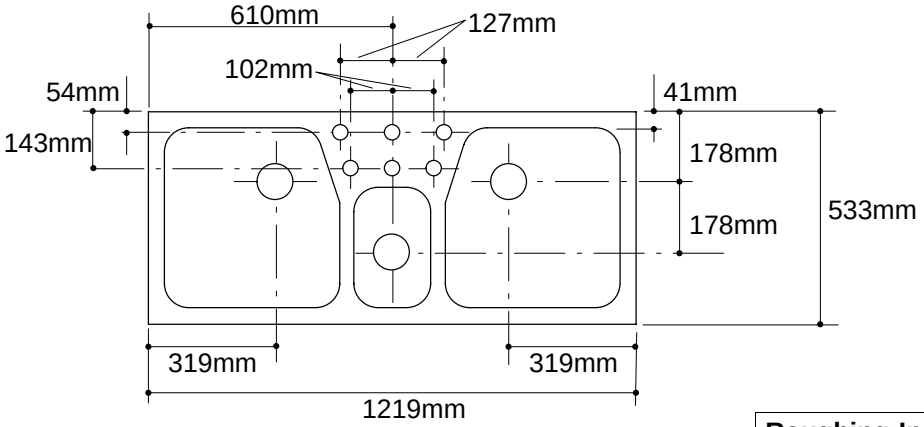

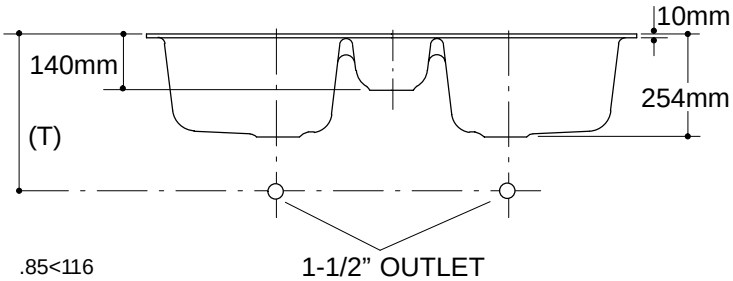

Roughing-In Notes	
Fixture dimensions are nominal and conform to tolerances in ASME/ANSI Standard A112.19.1M.	
For disposal unit, consult supplier for roughing-in measurements.	
(T) Drain typically 391mm.	
Cutout	1187 x 502mm with 25mm radius corners.

.85<116