**For Approved Manhole Steps, See L. D. H. Qualified Products List.
*E Dimension is Embedment of Manhole Steps. To be as Specified on L. D. H. Qualified Products List.

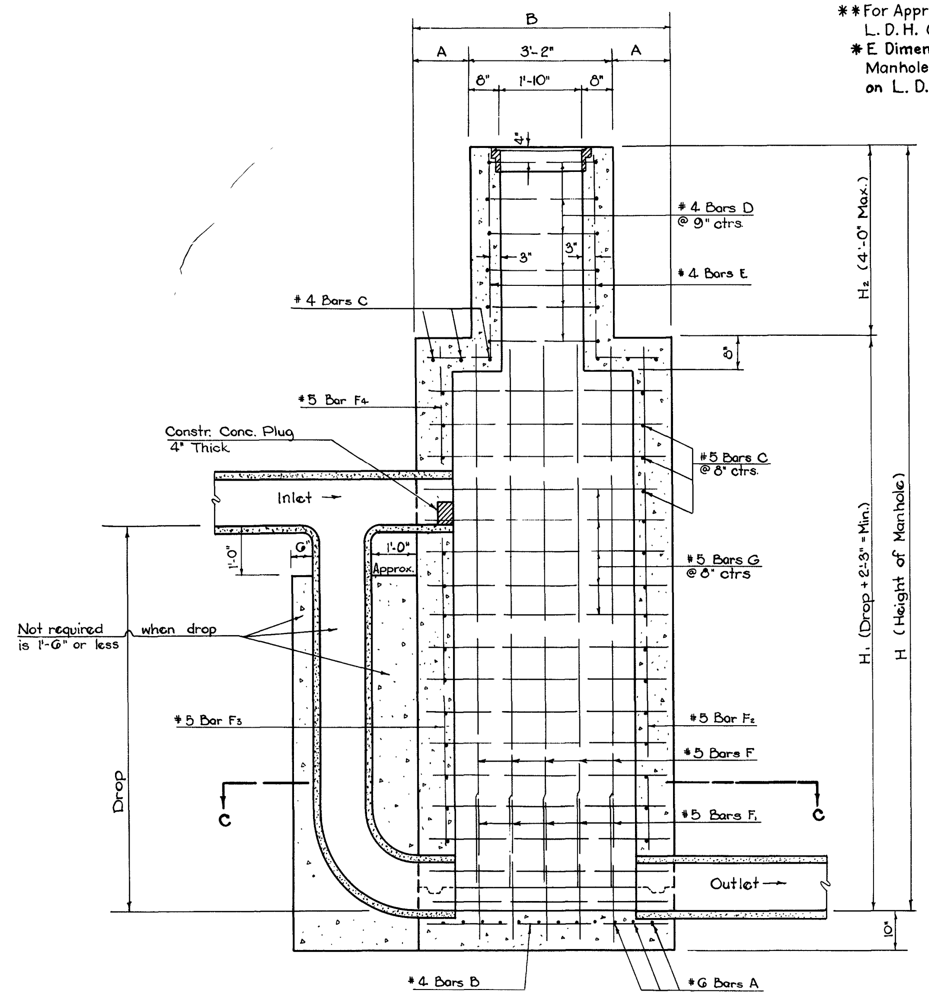

Section A-A

Note: When difference in F.L. Elevations of inlet & outlet (Drop) does not exceed 1'-6", connection of inlet to manhole will be made in same manner as that of outlet. (Vertical Pipe, Elbow & Concrete Enclosement not required)

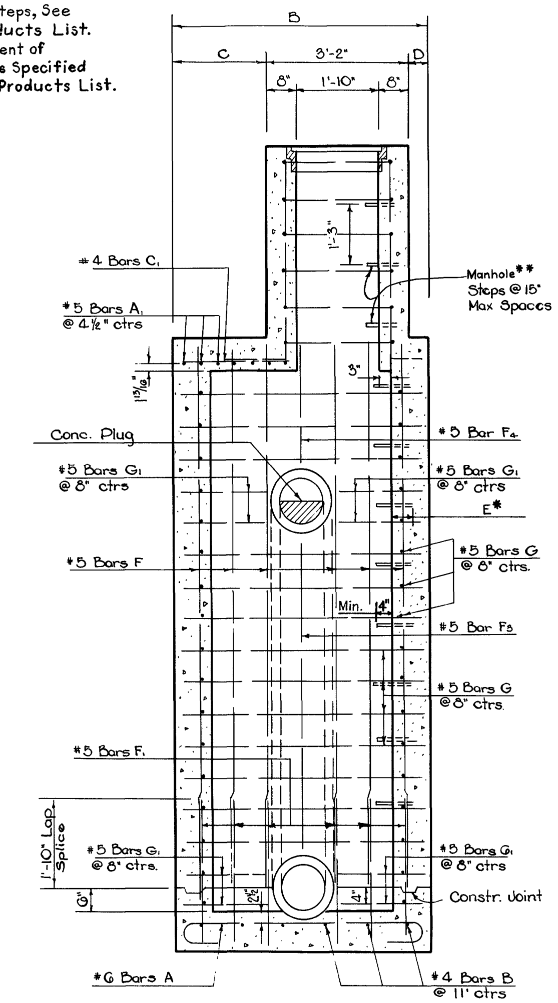

Section B-B

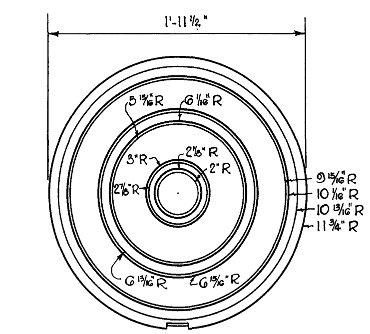

Plan of Bottom of Cover

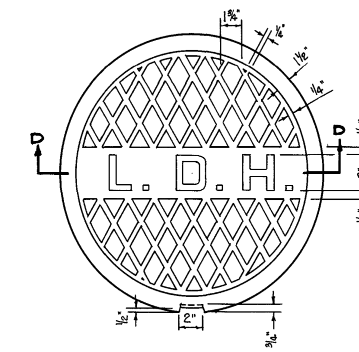

Plan

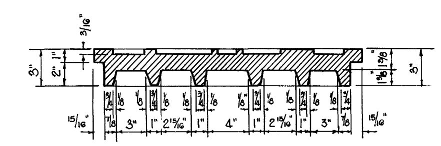

Section D-D

DETAILS OF C.I. COVER

DIMENSIONS						
H	T	S	B	A	C	D
8' Max	8"	3'-6"	4'-10"	0'-10"	1'-5"	0'-3"
8'-1" – 16'	10"	4'-0"	5'-8"	1'-3"	2'-1"	0'-5"
16'-1" – 24'	12"	4'-0"	6'-0"	1'-5"	2'-3"	0'-7"

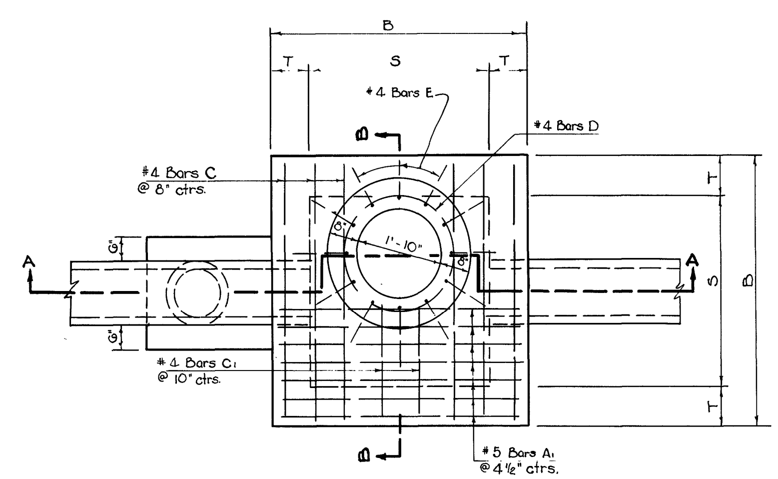

Plan

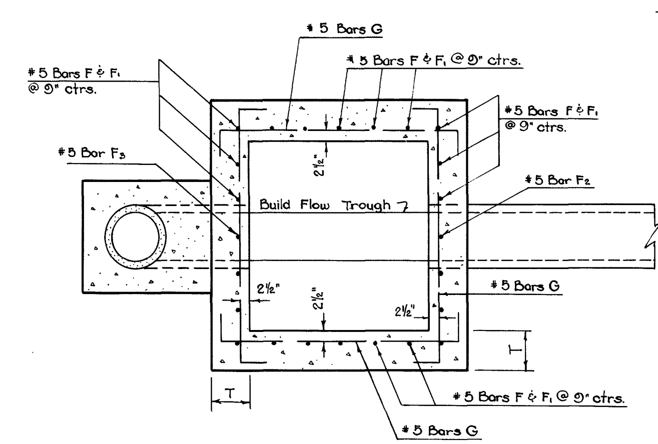

Section C-C

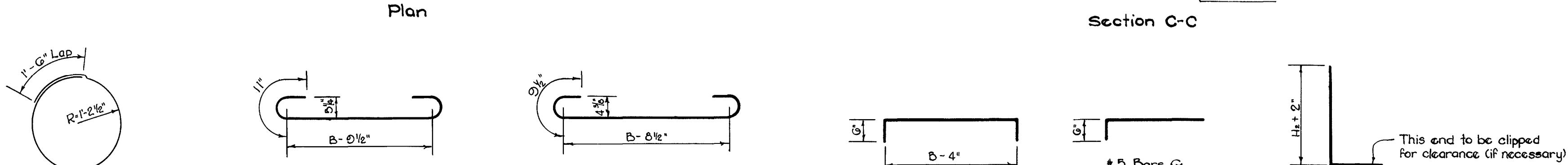

#4 Bars D — #6 Bars A — #5 Bars A1 — #5 Bars G — #5 Bars G1 — #4 Bars E

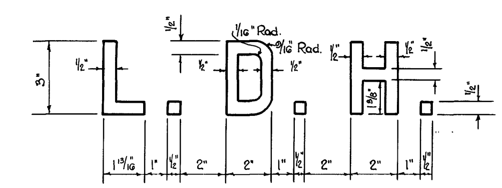

DETAILS OF LETTERS ON CAST IRON COVER

BILL OF MATERIAL

FOR: H=16'-0' H1 = 12'-0" H2 = 4'-0" DROP = 8'-1"
12" SAN. SEWER INLET 12" SAN. SEWER OUTLET

A= 1'-3" B=5'-8" C=2'-1" D=0'-5" S=4'-0" T=10"

Mark	Size	No.	Unit Length	Total Length	Location
A	#6	12	6'-8½"	80'-6"	Bottom Slab
A1	#5	7	6'-6½"	45'-9½"	Top Slab
G	#5	62	6'-4"	392'-8"	Horizontal in Walls
G1	#5	12	2'-4½"	28'-6"	" " "
F	#5	22	11'-4"	249'-4"	Vertical in Walls
F1	#5	22	3'-0"	66'-0"	" " "
F2	#5	1	10'-7"	10'-7"	" " "
F3	#5	1	6'-6"	6'-6"	" " "
F4	#5	1	2'-6"	2'-6"	" " "
B	#4	6	5'-4"	32'-0"	Bottom Slab
C	#4	6	5'-4"	32'-0"	Top Slab
C1	#4	2	2'-5"	4'-10"	" "
D	#4	6	9'-1"	54'-6"	Hoops in Chimney
E	#4	12	5'-5"	65'-0"	Vert " "

Total #6 Bars = 80'-6" Weight = 121 Lbs.
Total #5 Bars = 801'-10½" Weight = 836 Lbs.
Total #4 Bars = 188'-4" Weight = 126 Lbs.

Total Def. Reinf. Steel = 1083 Lbs.
Class A Concrete = 10.67 Cu. Yds. (Includes 1.55 Cu. Yds. in Encasement)
Castings = 364 Lbs.

Above Quantities are not Pay Items; Manhole to be paid for as a Unit, complete in place

WEIGHT OF CASTINGS

Cover Seat = 161 Lbs.
Cover = 203 Lbs.
Castings to be A.S.T.M. Class 30

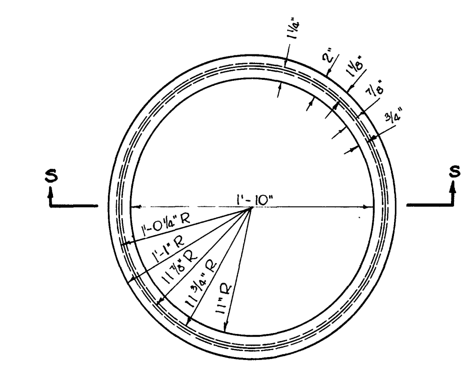

Plan of C.I. Cover Seat

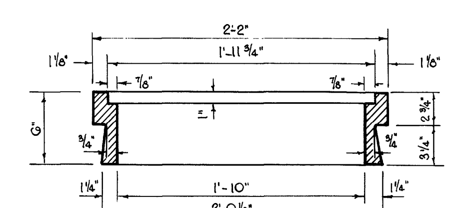

Section S-S

DETAILS OF C.I. COVER SEAT

Note:
The Contractor will not pour above the Bottom of the Slab until the paving adjacent to the Basin has been completed.

Approved by
Original Signed by Chief Engineer
Chief Engineer Date

STATE PROJECT	PARISH	SHEET NO.

DATE	DESCRIPTION	BY
5-3-76	M.H. Steps	W.T.J.
4-6-76	Note on Pouring Sequence	W.T.J.
7/13/64	Retraced	W.E.M.

REVISIONS

R-CB-36

STANDARD PLAN
R.C. MANHOLE FOR
SANITARY SEWER

DATED Nov. 1957

STATE OF LOUISIANA
DEPARTMENT OF HIGHWAYS

DESIGNED — DETAILED Q.A.H. — TRACED S.F.D.
CHECKED — CHECKED Marcum — CHECKED W.C. Marcum
IN CHARGE OF