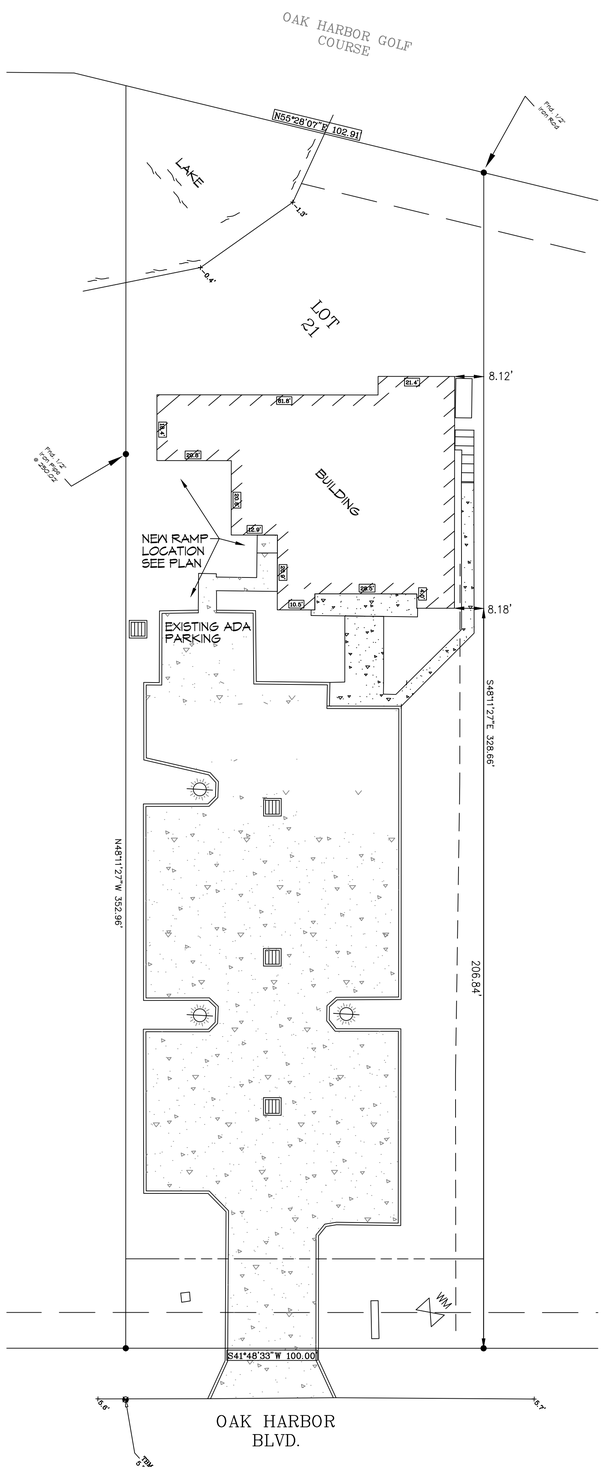

1 EXISTING SITE PLAN
SCALE: 1" = 20'-0"

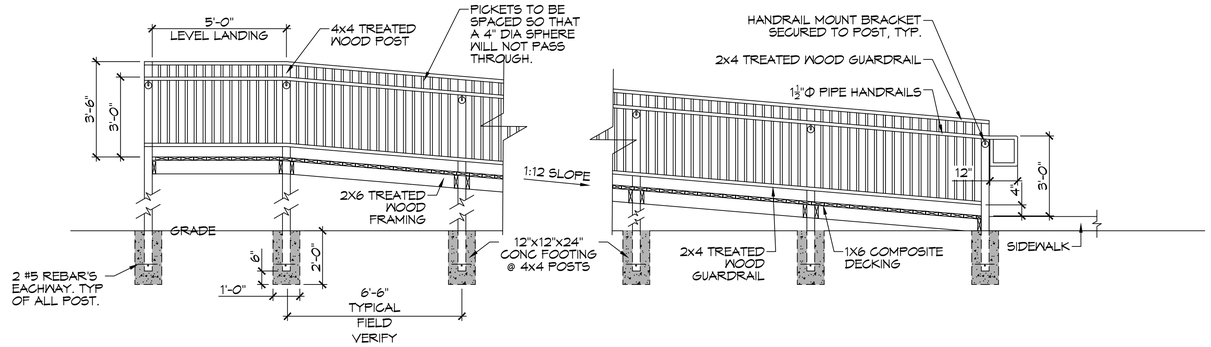

A
A101 | A101
TYPICAL RAMP SECTION
SCALE: 3/8" = 1'-0"

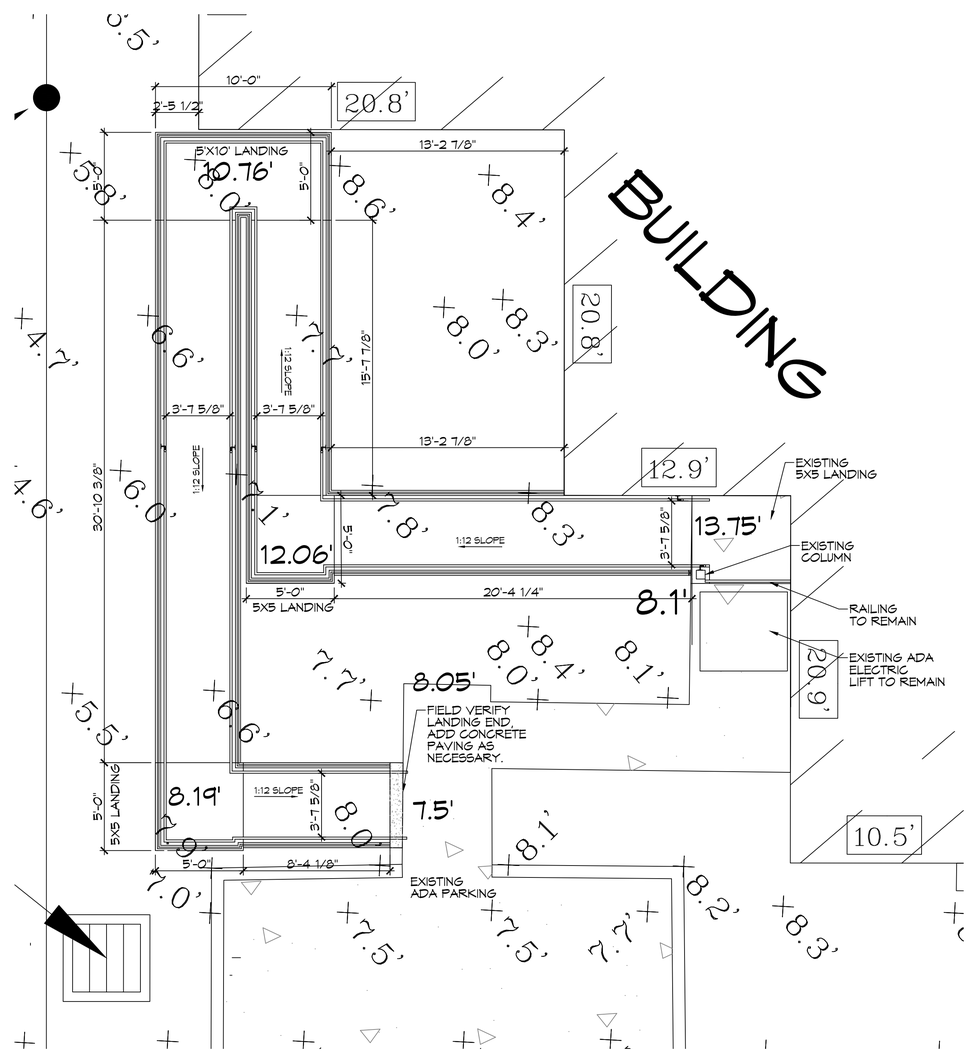

2 NEW ADA RAMP PLAN
SCALE: 1/4" = 1'-0"

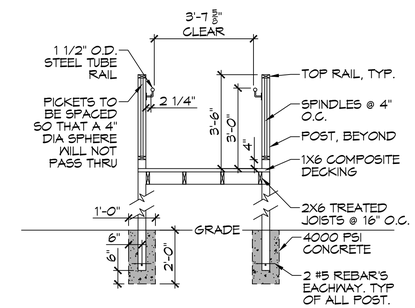

3 RAMP DETAIL
SCALE: 3/8"= 1'-0"

GENERAL NOTES

1. ALL LUMBER SHALL BE PRESSURE TREATED WITH A RETENTION OF .4 PER C.F.
2. ALL FASTENERS SHALL BE HOT DIPPED GALVANIZED (HDG) PER ASTM A153.
3. ALL CONNECTORS SHALL BE HDG PER ASTM A653, CLASS G185 SHEET WITH 1.85 OZ/SF ZINC COATING.
4. FIELD VERIFY PRIOR TO CONSTRUCTION.

DAMMON ENGINEERING, INC.
LOUISIANA & MISSISSIPPI
www.dammoneng.com
info@dammoneng.com
PH: 985.649.5832
Chief Engineer: Brian Mistich, PE
5545 Highway 190 East
Slidell, LA 70458

REVISIONS

#	DESCRIPTION	DATE
1	REVISED LAYOUT	02-19-2025

SEAL:
STATE OF LOUISIANA
BRIAN A. MISTICH
License No. 30187
PROFESSIONAL ENGINEER

ADA RAMP ADDITION
OAK HARBOR FAMILY DENTISTRY
FOR: APPLETON
480 OAK HARBOR BLVD.
SLIDELL, LA 70460

JOB No:	2451
DATE:	02-13-2025
DRAWN BY:	TNT
CHECKED BY:	JMS

These drawings are the property of Dammon Engineering, Inc. and are protected by the copyright laws of the United States. No part of these drawings may be reproduced or transmitted in any form or by any means, electronic or mechanical, including photocopying, recording, or by any information storage and retrieval system, without the prior written permission of Dammon Engineering, Inc. Unauthorized use of these drawings is prohibited. The use of these drawings for any purpose other than that for which the work is designed and developed without written consent of Dammon Engineering, Inc. is prohibited. Only those copies of these drawings bearing the seal of Dammon Engineering, Inc. are valid.

SHEET TITLE:
ADA RAMP PLAN

DRAWING NUMBER:
A101

SHEET No: 1 of 1