KOHLER®
Roughing-In

K-1569
SONATA®
ACRYLIC SHOWER STALL

Ordering Information

Accessories/hardware:		
Drain	K-9132	recommended
Glassworks shower enclosure or Forum bypass shower door	K-9854 K-703030	recommended
Glassworks steam door	K-9809	optional
Steam generator	K-1559-BA	optional
Dome light	K-1570	optional

Product Information

Fixture:	
Weight	200 lbs.
Configuration	1-piece
Drain Outlet	3-3/8” D.

Installation Notes

Refer to installation instructions included with fixture before beginning installation.

Fixture not drilled for supply fittings.

Shimming may be required to level fixture.

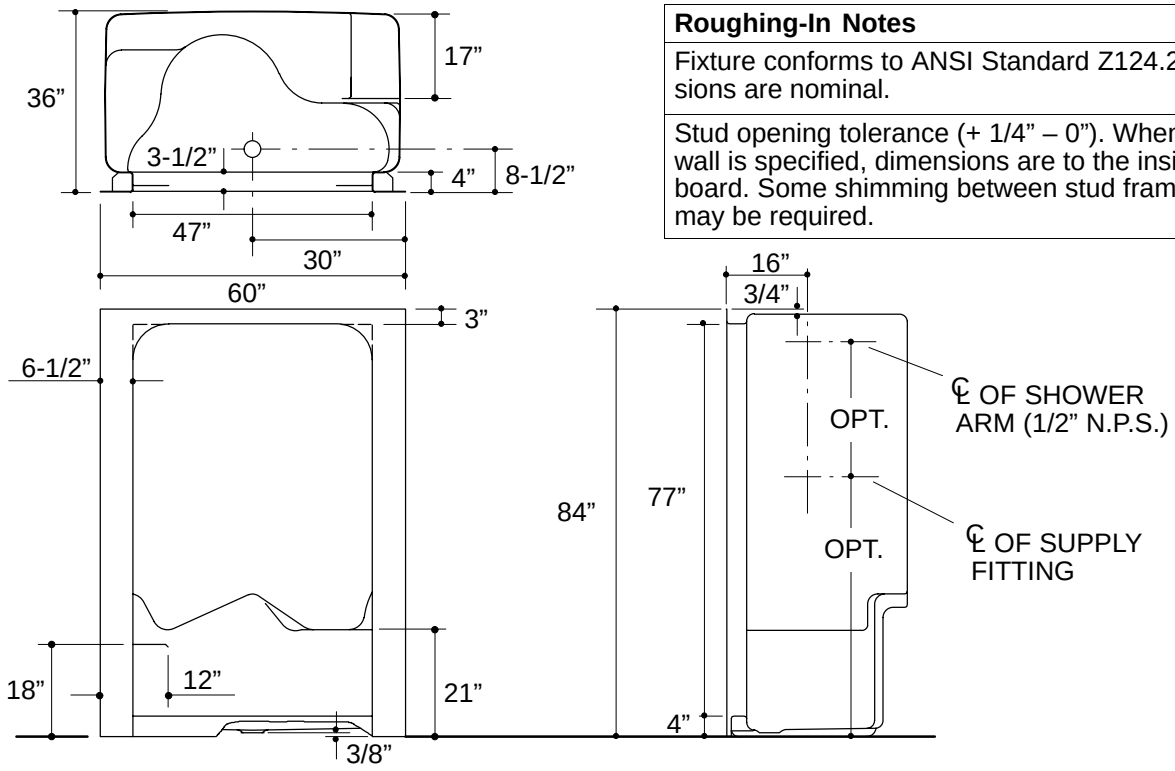

Roughing-In Notes
Fixture conforms to ANSI Standard Z124.2. All dimensions are nominal.
Stud opening tolerance (+ 1/4” – 0”). When fire rated wall is specified, dimensions are to the inside of the wall board. Some shimming between stud frame and fixture may be required.

.85<132