KOHLER®
Roughing-In

K-1538
TERRACINA 36”
FRP SHOWER STALL

Ordering Information

Accessories/hardware:		
Drain	K-9132	recommended
Arica™ shower door or Arica™ shower door or Focal shower door or Focal shower door	K-705025 or K-705026 or K-701216 or K-701217	recommended

Product Information

Fixture:	
Weight	48 Kg.
Configuration	1-piece
Outlet	∅86mm

Installation Notes

Refer to installation instructions included with fixture before beginning installation.

Fixture not drilled for supply fittings.

Shimming may be required to level fixture.

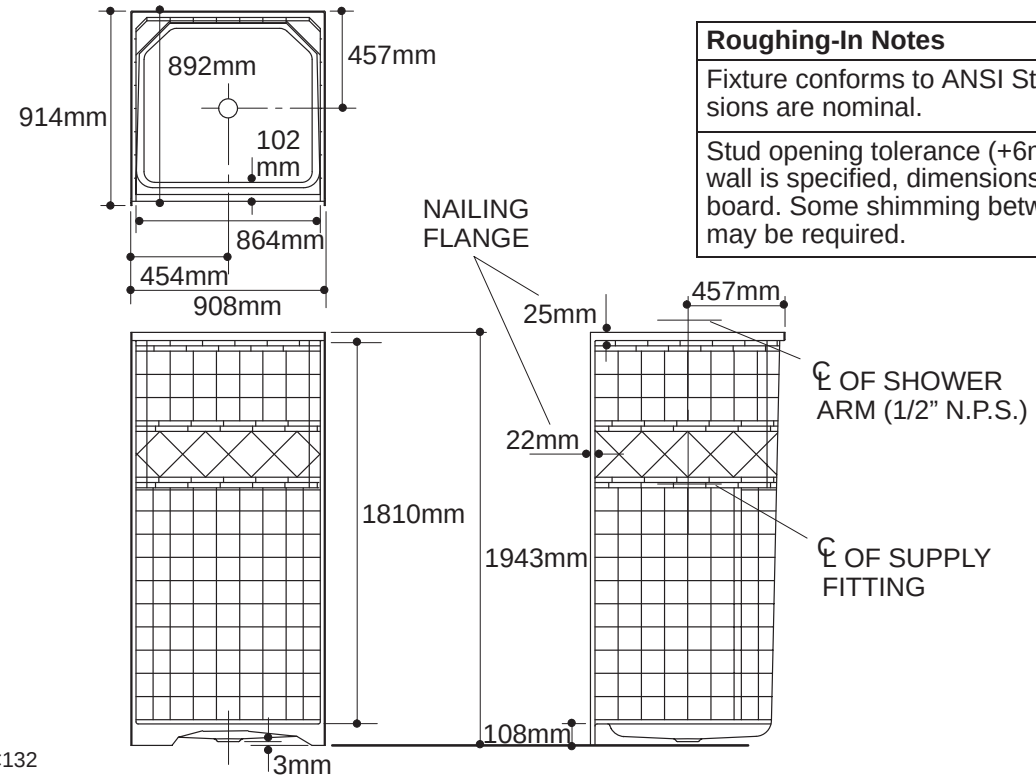

Roughing-In Notes
Fixture conforms to ANSI Standard Z124.2. All dimensions are nominal.
Stud opening tolerance (+6mm–0mm). When fire rated wall is specified, dimensions are to the inside of the wall board. Some shimming between stud frame and fixture may be required.

.90<132